CLASSIC **Series**

CLASSIC WHITE
(Natural Interior)

CLASSIC CHOCOLATE
(Painted Interior)

SHAKER **Series**

SHAKER WHITE
(Natural Interior)

SHAKER GRAY
(Painted Interior)

PEBBLE GRAY
(Natural Interior)

SHAKER NATURAL WOOD
(Natural Interior)

NAVY BLUE SHAKER
(Natural Interior)

CHARCOAL BLACK SHAKER
(Natural Interior)

ESCADA **Series**

ESCADA WHITE
(Natural Interior)

ESCADA DOVE
(Natural Interior)

ESCADA VINGATE WOOD
(Natural Interior)

ESCADA MIDNIGHT BLUE
(Natural Interior)

ROC CABINETRY
Address: 505 Best Friend Court, Suite 580 & 560, Norcross, GA 30071
Tel:770-847-8222 E-mail:info@roccabinetry.com www.roccabinetry.com

FEATURES - **Classic, Shaker & Escada Series**

- Solid hardwood door frames and face frames with plywood center panels in Shaker and Escada Series, hardwood center panels in Classic Series.
- Cabinet boxes are 1/2" plywood construction including sides, tops, and bottoms for lasting durability and strength.
- Cabinet boxes and shelves are match stained.
  *Natural UV Coated interior on Shaker White, Classic White, Shaker Natural Wood, Escada Midnight Blue, Pebble Gray, Navy Blue Shaker, Charcoal Black Shaker, Escada Dove, Escada Vintage Wood and Escada White.
  *Shaker Gray and Classic Chocolate are finished interior.
- 3/4" plywood shelves are standard in all cabinets.
- DTC 6-way adfustable soft close under mount drawer glides are standard on all cabinets.
- DTC soft close door hinges are fully adjustable.
- Wood baskets are standard in all lazy Susan cabinets (individual packed & sold separately).
- Full extension hardware, standard on all cabinets allowing for drawers to open past the back edge for easy access.
- 5/8" hardwood dovetail drawer boxes with 1/2" bottom standard on all cabinets.

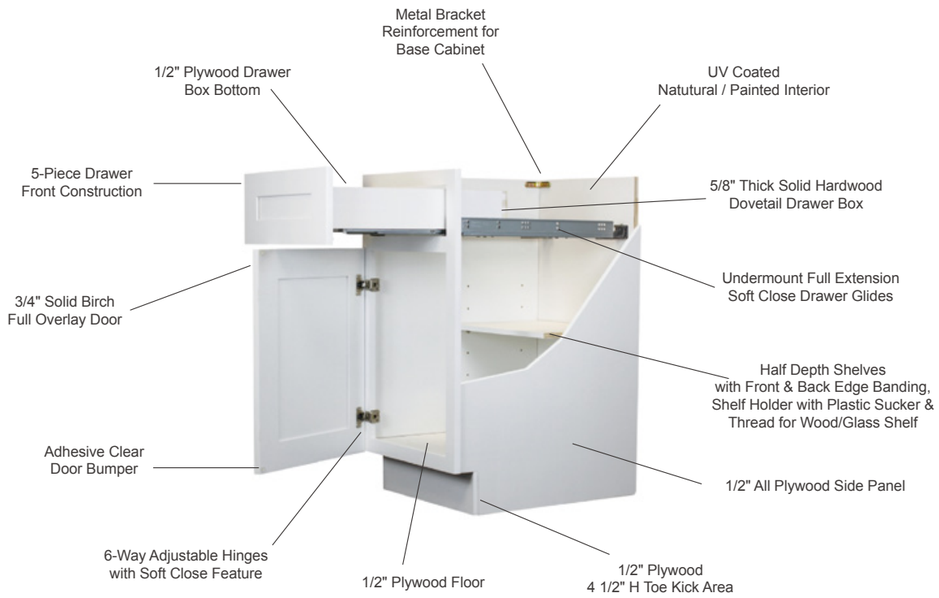

Actual product specifications may vary.

PRODUCT SPECIFICATIONS - Base Cabinets

NOTE: PRODUCT DIMENSIONS (P11-46) BASED ON SW/CB/SNW/EW/ED/EVW/EMB/CC, SGF/CW/PG/NB MAY VARY.

TRAY BASE

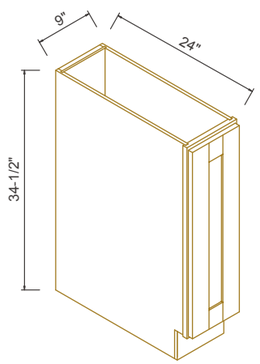

ITEM	DESCRIPTION	WIDTH	DEPTH	HEIGHT
TB09	Cabinet Dimension	9	24	34 1/2
	Door Dimension	8 5/8	3/4	29 5/8
	Note: Full high door base09 with 1 Adj. shelf.			

SINGLE DOOR SINGLE DRAWER BASES

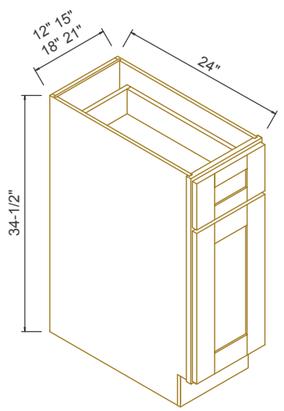

ITEM	DESCRIPTION	WIDTH	DEPTH	HEIGHT
B12	Cabinet Dimension	12	24	34 1/2
	Door Dimension	11 3/4	3/4	22 1/4
	Drawer Front	11 3/4	3/4	7 1/4
B15	Cabinet Dimension	15	24	34 1/2
	Door Dimension	14 3/4	3/4	22 1/4
	Drawer Front	14 3/4	3/4	7 1/4
B18	Cabinet Dimension	18	24	34 1/2
	Door Dimension	17 3/4	3/4	22 1/4
	Drawer Front	17 3/4	3/4	7 1/4
B21	Cabinet Dimension	21	24	34 1/2
	Door Dimension	20 3/4	3/4	22 1/4
	Drawer Front	20 3/4	3/4	7 1/4
	Note: 1 Adj. Shelf for B12-B21.			

Actual product specifications may vary.

ROC CABINETRY
Address: 505 Best Friend Court, Suite 580 & 560, Norcross, GA 30071
Tel:770-847-8222 E-mail:info@roccabinetry.com www.roccabinetry.com

PRODUCT SPECIFICATIONS - Base Cabinets

DOUBLE DOOR SINGLE DRAWER BASES

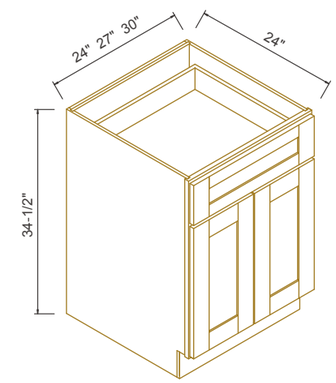

ITEM	DESCRIPTION	WIDTH	DEPTH	HEIGHT
B24	Cabinet Dimension	24	24	34 1/2
	Door Dimension	11 3/4	3/4	22 1/4
	Drawer Front	23 5/8	3/4	7 1/4
B27	Cabinet Dimension	27	24	34 1/2
	Door Dimension	13 7/32	3/4	22 1/4
	Drawer Front	26 5/8	3/4	7 1/4
B30	Cabinet Dimension	30	24	34 1/2
	Door Dimension	14 3/4	3/4	22 1/4
	Drawer Front	29 5/8	3/4	7 1/4
	Note: 1 Adj. Shelf for B24-B30.			

DOUBLE DOOR DOUBLE DRAWER BASES

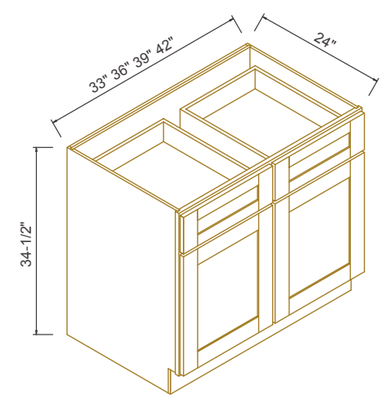

ITEM	DESCRIPTION	WIDTH	DEPTH	HEIGHT
B33	Cabinet Dimension	33	24	34 1/2
	Door Dimension	16 7/32	3/4	22 1/4
	Drawer Front	16 7/32	3/4	7 1/4
B36	Cabinet Dimension	36	24	34 1/2
	Door Dimension	17 3/4	3/4	22 1/4
	Drawer Front	17 3/4	3/4	7 1/4
B39	Cabinet Dimension	39	24	34 1/2
	Door Dimension	19 7/32	3/4	22 1/4
	Drawer Front	19 7/32	3/4	7 1/4
B42	Cabinet Dimension	42	24	34 1/2
	Door Dimension	20 3/4	3/4	22 1/4
	Drawer Front	20 3/4	3/4	7 1/4
	Note: 1 Adj. Shelf for B33-B42.			

Actual product specifications may vary.

PRODUCT SPECIFICATIONS - Drawer Base Cabinets

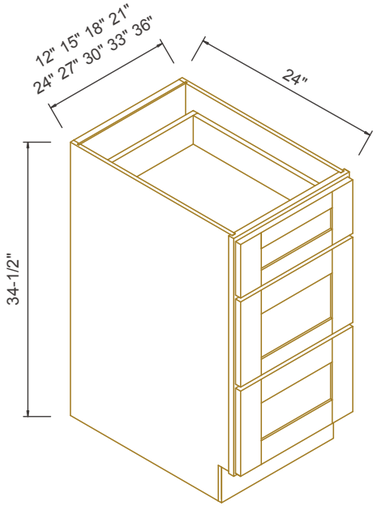

THREE DRAWER BASES					
	ITEM	DESCRIPTION	WIDTH	DEPTH	HEIGHT
	DB12-3	Cabinet Dimension	12	24	34 1/2
		Top Drawer Front	11 3/4	3/4	7 1/4
		Bottom Drawer Front	11 3/4	3/4	11 1/32
	DB15-3	Cabinet Dimension	15	24	34 1/2
		Top Drawer Front	14 3/4	3/4	7 1/4
		Bottom Drawer Front	14 3/4	3/4	11 1/32
	DB18-3	Cabinet Dimension	18	24	34 1/2
		Top Drawer Front	17 3/4	3/4	7 1/4
		Bottom Drawer Front	17 3/4	3/4	11 1/32
	DB21-3	Cabinet Dimension	21	24	34 1/2
		Top Drawer Front	20 3/4	3/4	7 1/4
		Bottom Drawer Front	20 3/4	3/4	11 1/32
	DB24-3	Cabinet Dimension	24	24	34 1/2
		Top Drawer Front	23 5/8	3/4	7 1/4
		Bottom Drawer Front	23 5/8	3/4	11 1/32
	DB27-3	Cabinet Dimension	27	24	34 1/2
		Top Drawer Front	26 5/8	3/4	7 1/4
		Bottom Drawer Front	26 5/8	3/4	11 1/32
	DB30-3	Cabinet Dimension	30	24	34 1/2
		Top Drawer Front	29 5/8	3/4	7 1/4
		Bottom Drawer Front	29 5/8	3/4	11 1/32
	DB33-3	Cabinet Dimension	33	24	34 1/2
		Top Drawer Front	32 5/8	3/4	7 1/4
		Bottom Drawer Front	32 5/8	3/4	11 1/32
	DB36-3	Cabinet Dimension	36	24	34 1/2
		Top Drawer Front	35 5/8	3/4	7 1/4
		Bottom Drawer Front	35 5/8	3/4	11 1/32

Actual product specifications may vary.

ROC CABINETRY
Address: 505 Best Friend Court, Suite 580 & 560, Norcross, GA 30071
Tel:770-847-8222 E-mail:info@roccabinetry.com www.roccabinetry.com

PRODUCT SPECIFICATIONS - Drawer Base Cabinets

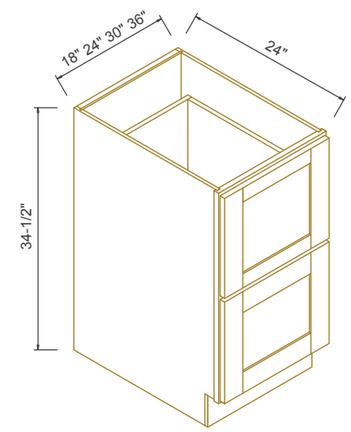

TWO DRAWER BASES					
	ITEM	DESCRIPTION	WIDTH	DEPTH	HEIGHT
	DB18-2	Cabinet Dimension	18	24	34 1/2
		Top Drawer Front	17 5/8	3/4	14 5/8
		Bottom Drawer Front	17 5/8	3/4	14 5/8
	DB24-2	Cabinet Dimension	24	24	34 1/2
		Top Drawer Front	23 5/8	3/4	14 5/8
		Bottom Drawer Front	23 5/8	3/4	14 5/8
	DB30-2	Cabinet Dimension	30	24	34 1/2
		Top Drawer Front	29 5/8	3/4	14 5/8
		Bottom Drawer Front	29 5/8	3/4	14 5/8
	DB36-2	Cabinet Dimension	36	24	34 1/2
		Top Drawer Front	35 5/8	3/4	14 5/8
		Bottom Drawer Front	35 5/8	3/4	14 5/8

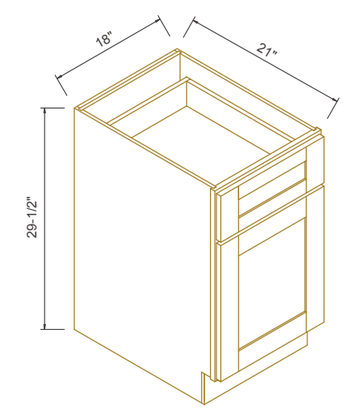

FILE DRAWER BASE					
	ITEM	DESCRIPTION	WIDTH	DEPTH	HEIGHT
	DFB18	Cabinet Dimension	18	21	29 1/2
		Top Drawer Front	17 3/4	3/4	7 1/4
		Bottom Drawer Front	17 3/4	3/4	17

Actual product specifications may vary.

PRODUCT SPECIFICATIONS - Sink Base Cabinets

DOUBLE DOOR SINGLE DRAWER FACE SINK BASES

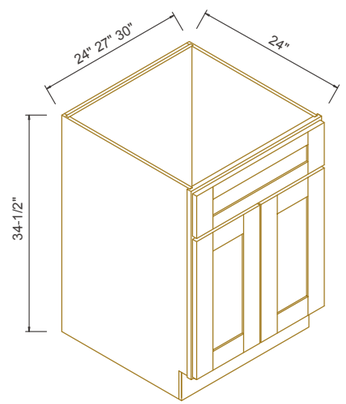

ITEM	DESCRIPTION	WIDTH	DEPTH	HEIGHT
SB24	Cabinet Dimension	24	24	34 1/2
	Door Dimension	11 3/4	3/4	22 1/4
	Drawer Front	23 5/8	3/4	7 1/4
SB27	Cabinet Dimension	27	24	34 1/2
	Door Dimension	13 7/32	3/4	22 1/4
	Drawer Front	26 5/8	3/4	7 1/4
SB30	Cabinet Dimension	30	24	34 1/2
	Door Dimension	14 3/4	3/4	22 1/4
	Drawer Front	29 5/8	3/4	7 1/4

DOUBLE DOOR DOUBLE DRAWER FACE SINK BASES

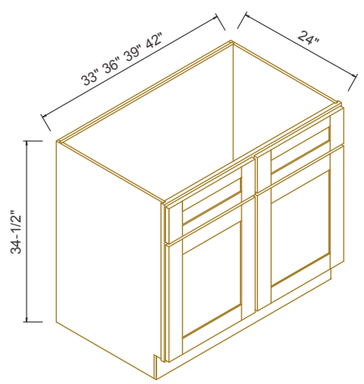

ITEM	DESCRIPTION	WIDTH	DEPTH	HEIGHT
SB33	Cabinet Dimension	33	24	34 1/2
	Door Dimension	16 7/32	3/4	22 1/4
	Drawer Front	16 7/32	3/4	7 1/4
SB36	Cabinet Dimension	36	24	34 1/2
	Door Dimension	17 3/4	3/4	22 1/4
	Drawer Front	17 3/4	3/4	7 1/4
SB39	Cabinet Dimension	39	24	34 1/2
	Door Dimension	19 7/32	3/4	22 1/4
	Drawer Front	19 7/32	3/4	7 1/4
SB42	Cabinet Dimension	42	24	34 1/2
	Door Dimension	20 3/4	3/4	22 1/4
	Drawer Front	20 3/4	3/4	7 1/4

Actual product specifications may vary.

ROC CABINETRY
Address: 505 Best Friend Court, Suite 580 & 560, Norcross, GA 30071
Tel:770-847-8222 E-mail:info@roccabinetry.com www.roccabinetry.com

PRODUCT SPECIFICATIONS - Base Cabinets

CORNER SINK BASES

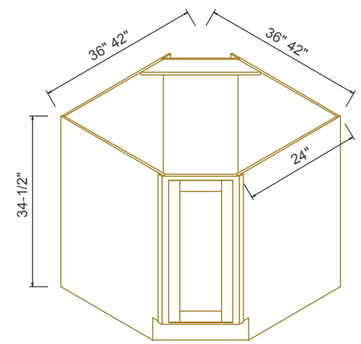

ITEM	DESCRIPTION	WIDTH	DEPTH	HEIGHT
NCSB36	Cabinet Dimension	36	24	34 1/2
	Door Dimension	29 5/8 H	3/4	15 13/32 W
NCSB42	Cabinet Dimension	42	24	34 1/2
	Door Dimension	29 5/8 H	3/4	23 7/32 W

FARM SINK BASES

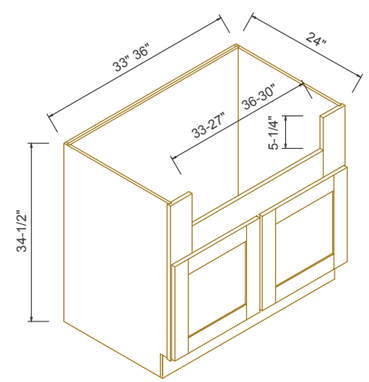

ITEM	DESCRIPTION	WIDTH	DEPTH	HEIGHT
FSB33	Cabinet Dimension	33	24	34 1/2
	Door Dimension	16 7/32	3/4	18 1/4
FSB36	Cabinet Dimension	36	24	34 1/2
	Door Dimension	17 3/4	3/4	18 1/4

Actual product specifications may vary.

PRODUCT SPECIFICATIONS - Base Corner Cabinets

LAZY SUSAN BASES WITH SHELF

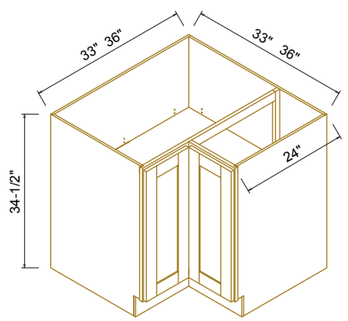

ITEM	DESCRIPTION	WIDTH	DEPTH	HEIGHT
BER33	Cabinet Dimension	33	24	34 1/2
	Door Dimension	7 3/16	3/4	29 5/8
BER36	Cabinet Dimension	36	24	34 1/2
	Door Dimension	10 3/16	3/4	29 5/8

Note: 1 Adj. Shelf for BER33-BER36.

LAZY SUSUAN TURN TABLE FOR BER33&BER36

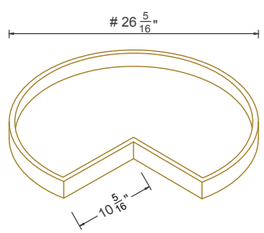

ITEM	DESCRIPTION	WIDTH	DEPTH	HEIGHT
BER-B	Diameter Dimension	26 5/16		
	Diameter Dimension	26 5/16		

BASE END OPEN SHELF

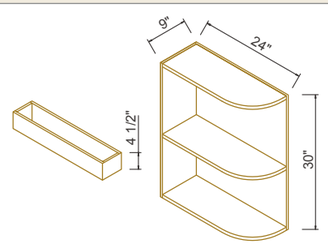

ITEM	DESCRIPTION	WIDTH	DEPTH	HEIGHT
BES09	Cabinet Dimension	9	24	34 1/2

Actual product specifications may vary.

ROC CABINETRY
Address: 505 Best Friend Court, Suite 580 & 560, Norcross, GA 30071
Tel:770-847-8222 E-mail:info@roccabinetry.com www.roccabinetry.com

PRODUCT SPECIFICATIONS - Base Cabinets

SPICE RACK BASE

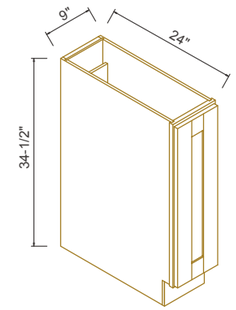

ITEM	DESCRIPTION	WIDTH	DEPTH	HEIGHT
BSR09	Cabinet Dimension	9	24	34 1/2
	Door Dimension	8 5/8	3/4	29 5/8

WASTE BASKET BASE

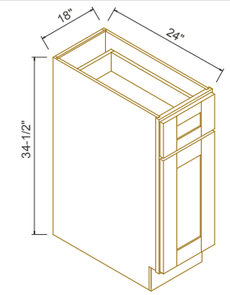

ITEM	DESCRIPTION	WIDTH	DEPTH	HEIGHT
BWBK18-2A	Cabinet Dimension	18	24	34 1/2
	Top Drawer Front	17 3/4	3/4	7 1/4
	Bottom Drawer Front	17 3/4	3/4	22 1/4

BASE END CABINET

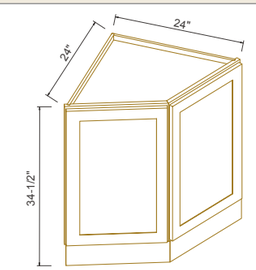

ITEM	DESCRIPTION	WIDTH	DEPTH	HEIGHT
BEC24	Cabinet Dimension	24	24	34 1/2
	Door Dimension	18 3/8	3/4	29 5/8

Note: 1 Adj. Shelf for BEC24.

Actual product specifications may vary.

PRODUCT SPECIFICATIONS - Base Cabinets

BASE END ANGLE CABINETS

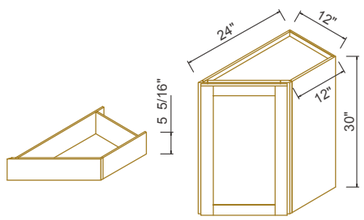

ITEM	DESCRIPTION	WIDTH	DEPTH	HEIGHT
BEA12-R/L	Cabinet Dimension	12	24	34 1/2
	Door Dimension	16 19/32	3/4	29 5/8
	Note: 1 Adj. Shelf for BEA12-R/L.			

BLIND CORNER BASES

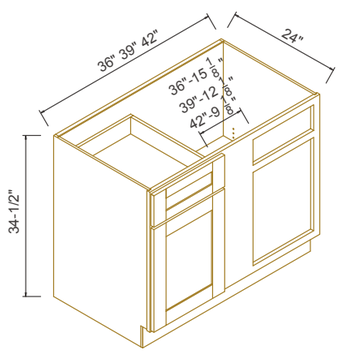

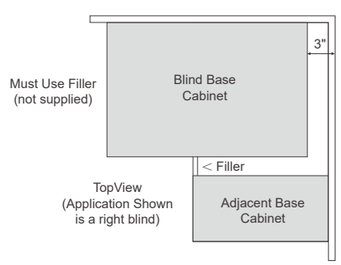

ITEM	DESCRIPTION	WIDTH	DEPTH	HEIGHT
BBC36	Cabinet Dimension	36	24	34 1/2
	Door Dimension	11 3/4	3/4	22 1/4
	Drawer Front	11 3/4	3/4	7 1/4
BBC39	Cabinet Dimension	39	24	34 1/2
	Door Dimension	14 3/4	3/4	22 1/4
	Drawer Front	14 3/4	3/4	7 1/4
BBC42	Cabinet Dimension	42	24	34 1/2
	Door Dimension	17 3/4	3/4	22 1/4
	Drawer Front	17 3/4	3/4	7 1/4

	MIN	MAX
BBC36	39	42
BBC39	42	45
BBC42	45	48

Note: 1 Adj. Shelf for BBC36-BBC42.

Actual product specifications may vary.

ROC CABINETRY
Address: 505 Best Friend Court, Suite 580 & 560, Norcross, GA 30071
Tel:770-847-8222 E-mail:info@roccabinetry.com www.roccabinetry.com

PRODUCT SPECIFICATIONS - Base Cabinets

SPICE DRAWER BASE

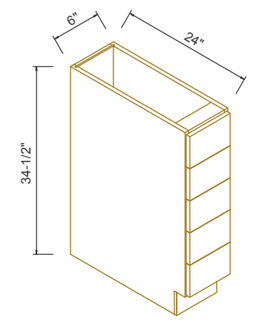

ITEM	DESCRIPTION	WIDTH	DEPTH	HEIGHT
BSDC6	Cabinet Dimension	6	24	34 1/2
	Drawer Front	5 5/8	3/4	5 13/16

MICROWAVE BASE CABINET

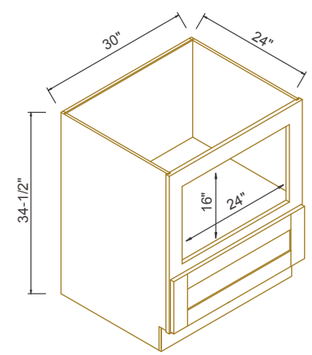

ITEM	DESCRIPTION	WIDTH	DEPTH	HEIGHT
BM30A	Cabinet Dimension	30	24	34 1/2
	Rout Out	24	24	16
	Drawer Front	29 5/8	3/4	9

Actual product specifications may vary.

PRODUCT SPECIFICATIONS - Base Cabinets

FULL HIGH DOOR BASE CABINETS

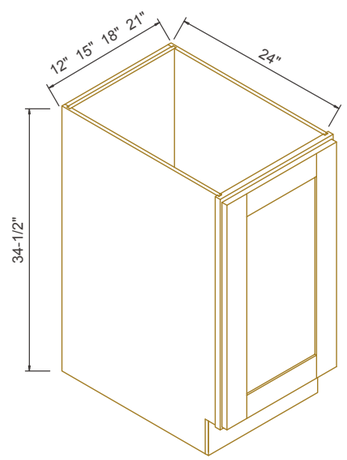

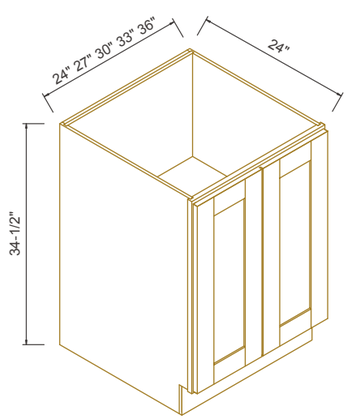

ITEM	DESCRIPTION	WIDTH	DEPTH	HEIGHT
B12FHD	Cabinet Dimension	12	24	34 1/2
	Door Dimension	11 3/4	3/4	29 5/8
B15FHD	Cabinet Dimension	15	24	34 1/2
	Door Dimension	14 3/4	3/4	29 5/8
B18FHD	Cabinet Dimension	18	24	34 1/2
	Door Dimension	17 3/4	3/4	29 5/8
B21FHD	Cabinet Dimension	21	24	34 1/2
	Door Dimension	20 3/4	3/4	29 5/8
Note: one shelf-full depth.				
B24FHD	Cabinet Dimension	24	24	34 1/2
	Door Dimension	11 3/4	3/4	29 5/8
B27FHD	Cabinet Dimension	27	24	34 1/2
	Door Dimension	13 7/32	3/4	29 5/8
B30FHD	Cabinet Dimension	30	24	34 1/2
	Door Dimension	14 3/4	3/4	29 5/8
B33FHD	Cabinet Dimension	33	24	34 1/2
	Door Dimension	16 7/32	3/4	29 5/8
B36FHD	Cabinet Dimension	36	24	34 1/2
	Door Dimension	17 3/4	3/4	29 5/8
Note: one shelf-full depth.				

Actual product specifications may vary.

ROC CABINETRY
Address: 505 Best Friend Court, Suite 580 & 560, Norcross, GA 30071
Tel:770-847-8222 E-mail:info@roccabinetry.com www.roccabinetry.com

PRODUCT SPECIFICATIONS - Tall Cabinets

OVEN CABINETS WITH THREE DRAWERS

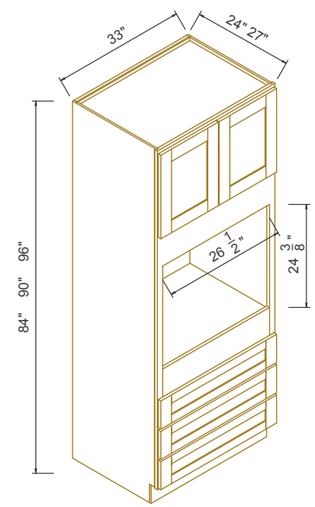

ITEM	DESCRIPTION	WIDTH	DEPTH	HEIGHT
OD3384	Cabinet Dimension	33	24	84
	Door Dimension	16 7/32	3/4	17
	Drawer Front	32 5/8	3/4	7 3/4
OD3390	Cabinet Dimension	33	24	90
	Door Dimension	16 7/32	3/4	23
	Drawer Front	32 5/8	3/4	7 3/4
OD3396	Cabinet Dimension	33	24	96
	Door Dimension	16 7/32	3/4	29
	Drawer Front	32 5/8	3/4	7 3/4
OD338427	Cabinet Dimension	33	27	96
	Door Dimension	16 7/32	3/4	17
	Drawer Front	32 5/8	3/4	7 3/4
OD339027	Cabinet Dimension	33	27	96
	Door Dimension	16 7/32	3/4	23
	Drawer Front	32 5/8	3/4	7 3/4
OD339627	Cabinet Dimension	33	27	96
	Door Dimension	16 7/32	3/4	29
	Drawer Front	32 5/8	3/4	7 3/4
Note: Can be modified to accommodate a double/combo oven.				

Actual product specifications may vary.

PRODUCT SPECIFICATIONS - Tall Cabinets

WALL PANTRY WITH THREE DRAWERS

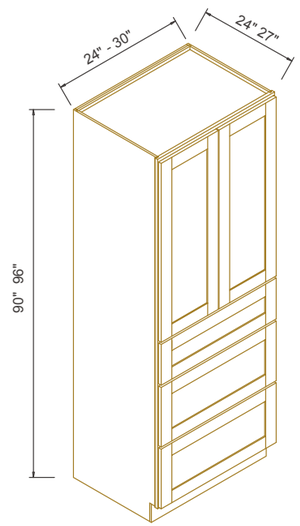

ITEM	DESCRIPTION	WIDTH	DEPTH	HEIGHT
WDP2490	Cabinet Dimension	24	24	90
	Door Dimension	14 3/4	3/4	43 5/8
	Top Drawer Front	23 5/8	3/4	11
	Bottom Drawer Front	23 5/8	3/4	15
WDP2496	Cabinet Dimension	24	24	96
	Door Dimension	14 3/4	3/4	49 5/8
	Top Drawer Front	23 5/8	3/4	11
	Bottom Drawer Front	23 5/8	3/4	15
WDP3090	Cabinet Dimension	30	24	90
	Door Dimension	14 3/4	3/4	43 5/8
	Top Drawer Front	29 5/8	3/4	11
	Bottom Drawer Front	29 5/8	3/4	15
WDP3096	Cabinet Dimension	30	24	96
	Door Dimension	14 3/4	3/4	49 5/8
	Top Drawer Front	29 5/8	3/4	11
	Bottom Drawer Front	29 5/8	3/4	15
WDP249027	Cabinet Dimension	24	27	96
	Door Dimension	11 3/4	3/4	43 5/8
	Top Drawer Front	23 5/8	3/4	11
	Bottom Drawer Front	23 5/8	3/4	15
WDP249627	Cabinet Dimension	24	27	96
	Door Dimension	11 3/4	3/4	49 5/8
	Top Drawer Front	23 5/8	3/4	11
	Bottom Drawer Front	23 5/8	3/4	15
WDP309027	Cabinet Dimension	30	27	96
	Door Dimension	14 3/4	3/4	43 5/8
	Top Drawer Front	29 5/8	3/4	11
	Bottom Drawer Front	29 5/8	3/4	15
WDP309627	Cabinet Dimension	30	27	96
	Door Dimension	14 3/4	3/4	49 5/8
	Top Drawer Front	29 5/8	3/4	11
	Bottom Drawer Front	29 5/8	3/4	15
Note: 2 Adj. Shelves for WDP2490-WDP3096.				

Actual product specifications may vary.

ROC CABINETRY
Address: 505 Best Friend Court, Suite 580 & 560, Norcross, GA 30071
Tel:770-847-8222 E-mail:info@roccabinetry.com www.roccabinetry.com

PRODUCT SPECIFICATIONS - Tall Cabinets

WALL PANTRIES

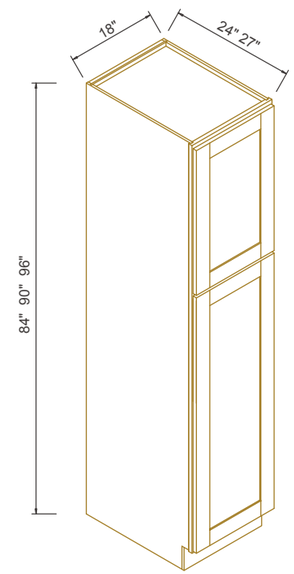

ITEM	DESCRIPTION	WIDTH	DEPTH	HEIGHT
WP1884	Cabinet Dimension	18	24	84
	Top Door Dimension	17 3/4	3/4	29 5/8
	Bottom Door Dimension	17 3/4	3/4	49 3/8
WP1890	Cabinet Dimension	18	24	90
	Top Door Dimension	17 3/4	3/4	35 5/8
	Bottom Door Dimension	17 3/4	3/4	49 3/8
WP1896	Cabinet Dimension	18	24	96
	Top Door Dimension	17 3/4	3/4	41 5/8
	Bottom Door Dimension	17 3/4	3/4	49 3/8
WP188427	Cabinet Dimension	18	27	84
	Top Door Dimension	17 3/4	3/4	29 5/8
	Bottom Door Dimension	17 3/4	3/4	49 3/8
WP189027	Cabinet Dimension	18	27	90
	Top Door Dimension	17 3/4	3/4	35 5/8
	Bottom Door Dimension	17 3/4	3/4	49 3/8
WP189627	Cabinet Dimension	18	27	96
	Top Door Dimension	17 3/4	3/4	41 5/8
	Bottom Door Dimension	17 3/4	3/4	49 3/8
Note: 4 Adj. Shelves for WP1884-WP1896.				

Actual product specifications may vary.

PRODUCT SPECIFICATIONS - Tall Cabinets

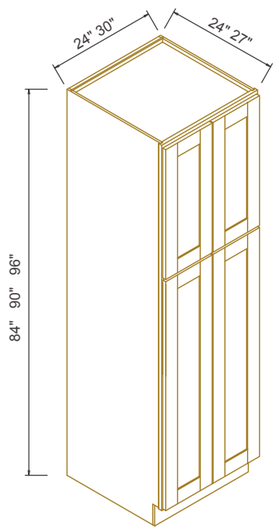

WALL PANTRIES				
ITEM	DESCRIPTION	WIDTH	DEPTH	HEIGHT
WP2484	Cabinet Dimension	24	24	84
	Top Door Dimension	11 3/4	3/4	29 5/8
	Bottom Door Dimension	11 3/4	3/4	49 3/8
WP2490	Cabinet Dimension	24	24	90
	Top Door Dimension	11 3/4	3/4	35 5/8
	Bottom Door Dimension	11 3/4	3/4	49 3/8
WP2496	Cabinet Dimension	24	24	96
	Top Door Dimension	11 3/4	3/4	41 5/8
	Bottom Door Dimension	11 3/4	3/4	49 3/8
WP3084	Cabinet Dimension	30	24	84
	Top Door Dimension	14 3/4	3/4	29 5/8
	Bottom Door Dimension	14 3/4	3/4	49 3/8
WP3090	Cabinet Dimension	30	24	90
	Top Door Dimension	14 3/4	3/4	35 5/8
	Bottom Door Dimension	14 3/4	3/4	49 3/8
WP3096	Cabinet Dimension	30	24	96
	Top Door Dimension	14 3/4	3/4	41 5/8
	Bottom Door Dimension	14 3/4	3/4	49 3/8
WP248427	Cabinet Dimension	24	27	84
	Top Door Dimension	11 3/4	3/4	29 5/8
	Bottom Door Dimension	11 3/4	3/4	49 3/8
WP249027	Cabinet Dimension	24	27	90
	Top Door Dimension	11 3/4	3/4	35 5/8
	Bottom Door Dimension	11 3/4	3/4	49 3/8
WP249627	Cabinet Dimension	24	27	96
	Top Door Dimension	11 3/4	3/4	41 5/8
	Bottom Door Dimension	11 3/4	3/4	49 3/8
WP308427	Cabinet Dimension	30	27	84
	Top Door Dimension	14 3/4	3/4	29 5/8
	Bottom Door Dimension	14 3/4	3/4	49 3/8
WP309027	Cabinet Dimension	30	27	90
	Top Door Dimension	14 3/4	3/4	35 5/8
	Bottom Door Dimension	14 3/4	3/4	49 3/8
WP309627	Cabinet Dimension	30	27	96
	Top Door Dimension	14 3/4	3/4	41 5/8
	Bottom Door Dimension	14 3/4	3/4	49 3/8
Note: 4 Adj. Shelves for WP2484-WP3096.				

Actual product specifications may vary.

ROC CABINETRY
Address: 505 Best Friend Court, Suite 580 & 560, Norcross, GA 30071
Tel:770-847-8222 E-mail:info@roccabinetry.com www.roccabinetry.com

PRODUCT SPECIFICATIONS - Wall Cabinets

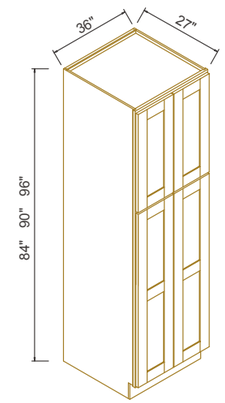

WAL PANTRIES				
ITEM	DESCRIPTION	WIDTH	DEPTH	HEIGHT
WP368427	Cabinet Dimension	36	27	84
	Top Door Dimension	17 3/4	3/4	29 5/8
	Bottom Door Dimension	17 3/4	3/4	49 3/8
WP369027	Cabinet Dimension	36	27	90
	Top Door Dimension	17 3/4	3/4	35 5/8
	Bottom Door Dimension	17 3/4	3/4	49 3/8
WP369627	Cabinet Dimension	36	27	96
	Top Door Dimension	17 3/4	3/4	41 5/8
	Bottom Door Dimension	17 3/4	3/4	49 3/8
Note: Wall Pantries with 4 Adj. Shelves.				

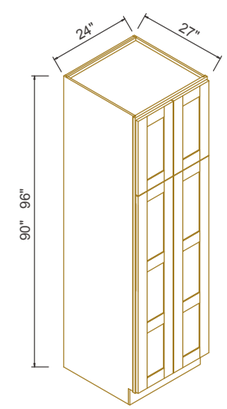

BROOM CLOSETS				
ITEM	DESCRIPTION	WIDTH	DEPTH	HEIGHT
BC249027	Cabinet Dimension	24	27	90
	Top Door Dimension	11 3/4	3/4	17 5/8
	Bottom Door Dimension	11 3/4	3/4	67 3/8
BC249627	Cabinet Dimension	24	27	96
	Top Door Dimension	11 3/4	3/4	23 5/8
	Bottom Door Dimension	11 3/4	3/4	67 3/8
Note: Broom Close with 3 Adj. Shelves.				

Actual product specifications may vary.

PRODUCT SPECIFICATIONS - Wall Cabinets

SINGLE DOOR WALL CABINETS

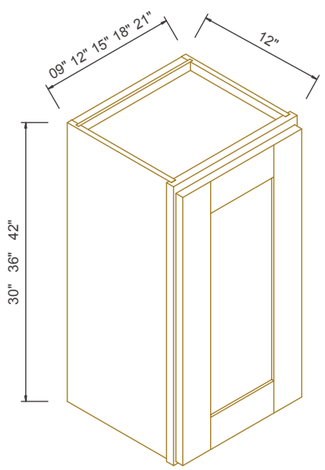

ITEM	DESCRIPTION	WIDTH	DEPTH	HEIGHT
W0930	Cabinet Dimension	9	12	30
	Door Dimension	8 5/8	3/4	29 5/8
W1230	Cabinet Dimension	12	12	30
	Door Dimension	11 3/4	3/4	29 5/8
W1530	Cabinet Dimension	15	12	30
	Door Dimension	14 3/4	3/4	29 5/8
W1830	Cabinet Dimension	18	12	30
	Door Dimension	17 3/4	3/4	29 5/8
W2130	Cabinet Dimension	21	12	30
	Door Dimension	20 3/4	3/4	29 5/8
W0936	Cabinet Dimension	9	12	36
	Door Dimension	8 5/8	3/4	35 5/8
W1236	Cabinet Dimension	12	12	36
	Door Dimension	11 3/4	3/4	35 5/8
W1536	Cabinet Dimension	15	12	36
	Door Dimension	14 3/4	3/4	35 5/8
W1836	Cabinet Dimension	18	12	36
	Door Dimension	17 3/4	3/4	35 5/8
W2136	Cabinet Dimension	21	12	36
	Door Dimension	20 3/4	3/4	35 5/8
W0942	Cabinet Dimension	9	12	42
	Door Dimension	8 5/8	3/4	41 5/8
W1242	Cabinet Dimension	12	12	42
	Door Dimension	11 3/4	3/4	41 5/8
W1542	Cabinet Dimension	15	12	42
	Door Dimension	14 3/4	3/4	41 5/8
W1842	Cabinet Dimension	18	12	42
	Door Dimension	17 3/4	3/4	41 5/8
W2142	Cabinet Dimension	21	12	42
	Door Dimension	20 3/4	3/4	41 5/8

Note: 30" H and 36" H cabinets with 2 Adj. Shelves; 42" H cabinets with 3 Adj Shelves.

Actual product specifications may vary.

ROC CABINETRY
Address: 505 Best Friend Court, Suite 580 & 560, Norcross, GA 30071
Tel:770-847-8222 E-mail:info@roccabinetry.com www.roccabinetry.com

PRODUCT SPECIFICATIONS - Wall Cabinets

DOUBLE DOOR WALL CABINETS

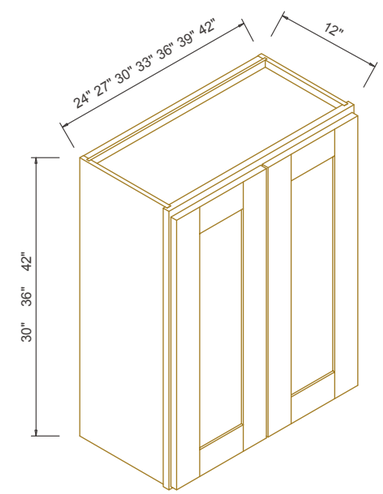

ITEM	DESCRIPTION	WIDTH	DEPTH	HEIGHT
W2430	Cabinet Dimension	24	12	30
	Door Dimension	11 3/4	3/4	29 5/8
W2730	Cabinet Dimension	27	12	30
	Door Dimension	13 1/4	3/4	29 5/8
W3030	Cabinet Dimension	30	12	30
	Door Dimension	14 3/4	3/4	29 5/8
W3330	Cabinet Dimension	33	12	30
	Door Dimension	16 1/4	3/4	29 5/8
W3630	Cabinet Dimension	36	12	30
	Door Dimension	17 3/4	3/4	29 5/8
W3930	Cabinet Dimension	39	12	30
	Door Dimension	19 1/4	3/4	29 5/8
W4230	Cabinet Dimension	42	12	30
	Door Dimension	20 3/4	3/4	29 5/8
W2436	Cabinet Dimension	24	12	36
	Door Dimension	11 3/4	3/4	35 5/8
W2736	Cabinet Dimension	27	12	36
	Door Dimension	13 1/4	3/4	35 5/8
W3036	Cabinet Dimension	30	12	36
	Door Dimension	14 3/4	3/4	35 5/8
W3336	Cabinet Dimension	33	12	36
	Door Dimension	16 1/4	3/4	35 5/8
W3636	Cabinet Dimension	36	12	36
	Door Dimension	17 3/4	3/4	35 5/8
W3936	Cabinet Dimension	39	12	36
	Door Dimension	19 1/4	3/4	35 5/8

Note: 30" H and 36" H cabinets with 2 Adj. Shelves; 42" H cabinets with 3 Adj Shelves.

Actual product specifications may vary.

PRODUCT SPECIFICATIONS - Wall Cabinets

DOUBLE DOOR WALL CABINETS

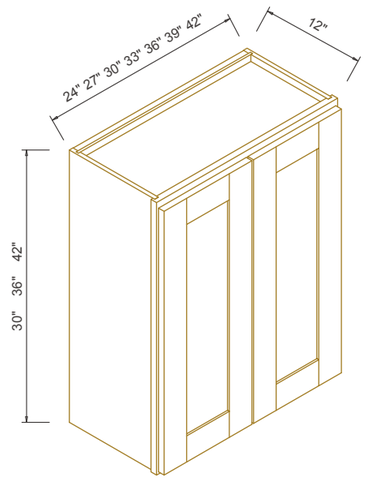

ITEM	DESCRIPTION	WIDTH	DEPTH	HEIGHT
W4236	Cabinet Dimension	42	12	36
	Door Dimension	20 3/4	3/4	35 5/8
W2442	Cabinet Dimension	24	12	42
	Door Dimension	11 3/4	3/4	41 5/8
W2742	Cabinet Dimension	27	12	42
	Door Dimension	13 1/4	3/4	41 5/8
W3042	Cabinet Dimension	30	12	42
	Door Dimension	14 3/4	3/4	41 5/8
W3342	Cabinet Dimension	33	12	42
	Door Dimension	16 1/4	3/4	41 5/8
W3642	Cabinet Dimension	36	12	42
	Door Dimension	17 3/4	3/4	41 5/8
W3942	Cabinet Dimension	39	12	42
	Door Dimension	19 1/4	3/4	41 5/8
W4242	Cabinet Dimension	42	12	42
	Door Dimension	20 3/4	3/4	41 5/8

Note: 30" H and 36" H cabinets with 2 Adj. Shelves; 42" H cabinets with 3 Adj Shelves.

Actual product specifications may vary.

ROC CABINETRY
Address: 505 Best Friend Court, Suite 580 & 560, Norcross, GA 30071
Tel:770-847-8222 E-mail:info@roccabinetry.com www.roccabinetry.com

PRODUCT SPECIFICATIONS - Wall Cabinets

DOUBLE DOOR WALL CABINETS

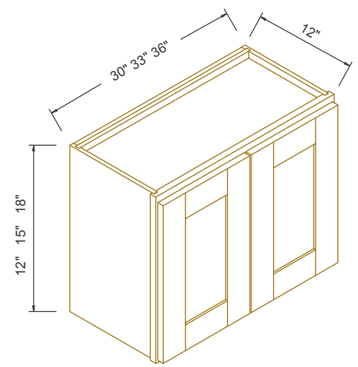

ITEM	DESCRIPTION	WIDTH	DEPTH	HEIGHT
W3012	Cabinet Dimension	30	12	12
	Door Dimension	14 3/4	3/4	11 5/8
W3015	Cabinet Dimension	30	12	15
	Door Dimension	14 3/4	3/4	14 5/8
W3018	Cabinet Dimension	30	12	18
	Door Dimension	14 3/4	3/4	17 5/8
W3312	Cabinet Dimension	33	12	12
	Door Dimension	16 7/32	3/4	11 5/8
W3315	Cabinet Dimension	36	12	15
	Door Dimension	16 7/32	3/4	14 5/8
W3318	Cabinet Dimension	36	12	18
	Door Dimension	16 7/32	3/4	17 5/8
W3612	Cabinet Dimension	36	12	12
	Door Dimension	17 3/4	3/4	11 5/8
W3615	Cabinet Dimension	36	12	15
	Door Dimension	17 3/4	3/4	14 5/8
W3618	Cabinet Dimension	36	12	18
	Door Dimension	17 3/4	3/4	17 5/8

DOUBLE DOOR WALL CABINETS

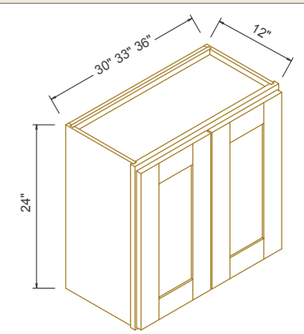

ITEM	DESCRIPTION	WIDTH	DEPTH	HEIGHT
W3024	Cabinet Dimension	30	12	24
	Door Dimension	14 3/4	3/4	23 5/8
W3324	Cabinet Dimension	33	12	24
	Door Dimension	16 7/32	3/4	23 5/8
W3624	Cabinet Dimension	36	12	24
	Door Dimension	17 3/4	3/4	23 5/8

Note: 24" H cabinet with 1 Adj. Shelf.

Actual product specifications may vary.

PRODUCT SPECIFICATIONS - Wall Cabinets

DOUBLE DOOR WALL CABINETS

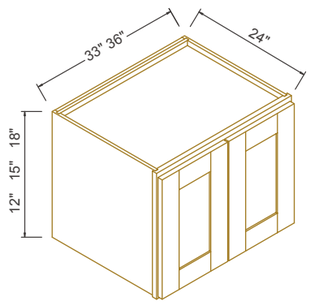

ITEM	DESCRIPTION	WIDTH	DEPTH	HEIGHT
W331224	Cabinet Dimension	33	24	12
	Door Dimension	16 7/32	3/4	11 5/8
W361224	Cabinet Dimension	36	24	12
	Door Dimension	17 3/4	3/4	11 5/8
W331524	Cabinet Dimension	33	24	15
	Door Dimension	16 7/32	3/4	14 5/8
W361524	Cabinet Dimension	36	24	15
	Door Dimension	17 3/4	3/4	14 5/8
W331824	Cabinet Dimension	33	24	18
	Door Dimension	16 7/32	3/4	17 5/8
W361824	Cabinet Dimension	36	24	18
	Door Dimension	17 3/4	3/4	17 5/8

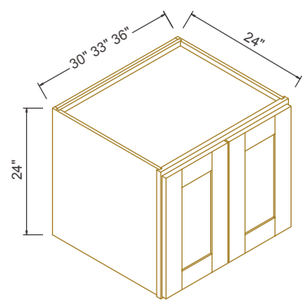

ITEM	DESCRIPTION	WIDTH	DEPTH	HEIGHT
W302424	Cabinet Dimension	30	24	24
	Door Dimension	14 3/4	3/4	23 5/8
W332424	Cabinet Dimension	33	24	24
	Door Dimension	16 7/32	3/4	23 5/8
W362424	Cabinet Dimension	36	24	24
	Door Dimension	17 3/4	3/4	23 5/8

Note: 24" H Cabinet with 1 Adj. Shelf.

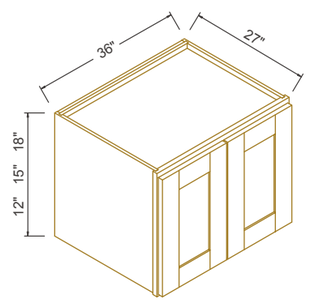

ITEM	DESCRIPTION	WIDTH	DEPTH	HEIGHT
W361227	Cabinet Dimension	36	27	12
	Door Dimension	17 3/4	3/4	11 5/8
W361527	Cabinet Dimension	36	27	15
	Door Dimension	17 3/4	3/4	14 5/8
W361827	Cabinet Dimension	36	27	18
	Door Dimension	17 3/4	3/4	17 5/8
W362427	Cabinet Dimension	36	27	24
	Door Dimension	17 3/4	3/4	23 5/8

Actual product specifications may vary.

ROC CABINETRY
Address: 505 Best Friend Court, Suite 580 & 560, Norcross, GA 30071
Tel:770-847-8222 E-mail:info@roccabinetry.com www.roccabinetry.com

PRODUCT SPECIFICATIONS - Wall Cabinets

SINGLE DOOR WALL CABINETS

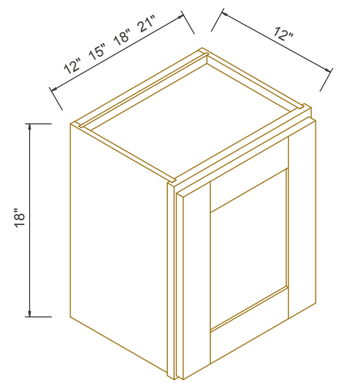

ITEM	DESCRIPTION	WIDTH	DEPTH	HEIGHT
W1218	Cabinet Dimension	12	12	18
	Door Dimension	11 3/4	3/4	17 5/8
W1518	Cabinet Dimension	15	12	18
	Door Dimension	14 3/4	3/4	17 5/8
W1818	Cabinet Dimension	18	12	18
	Door Dimension	17 3/4	3/4	17 5/8
W2118	Cabinet Dimension	21	12	18
	Door Dimension	20 3/4	3/4	17 5/8

DOUBLE DOOR WALL CABINETS

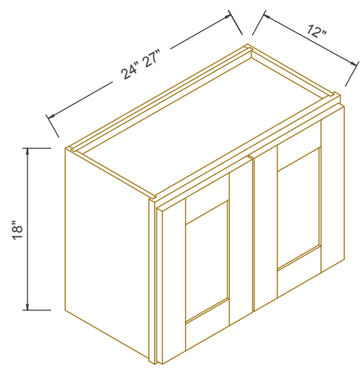

ITEM	DESCRIPTION	WIDTH	DEPTH	HEIGHT
W2418	Cabinet Dimension	24	12	18
	Door Dimension	11 3/14	3/4	17 5/8
W2718	Cabinet Dimension	27	12	18
	Door Dimension	13 7/32	3/4	17 5/8

Actual product specifications may vary.

PRODUCT SPECIFICATIONS - Wall Cabinets

DIAGONAL CORNER CABINETS

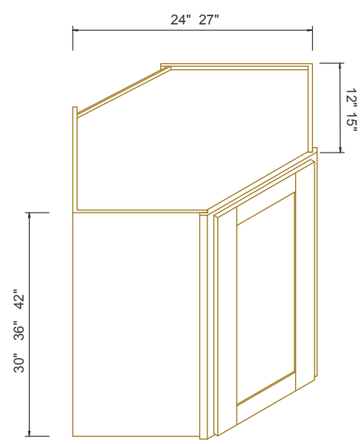

ITEM	DESCRIPTION	WIDTH	DEPTH	HEIGHT
WDC2430	Cabinet Dimension	24	12	30
	Door Dimension	15 13/32	3/4	29 5/8
WDC2436	Cabinet Dimension	24	12	36
	Door Dimension	15 13/32	3/4	35 5/8
WDC2442	Cabinet Dimension	24	12	42
	Door Dimension	15 13/32	3/4	41 5/8
WDC273015	Cabinet Dimension	27	15	30
	Door Dimension	15 13/32	3/4	29 5/8
WDC273615	Cabinet Dimension	27	15	36
	Door Dimension	15 13/32	3/4	35 5/8
WDC274215	Cabinet Dimension	27	15	42
	Door Dimension	15 13/32	3/4	41 5/8

Note: 30" H and 36" H cabinets with 2 Adj. Shelves; 42" H cabinets with 3 Adj Shelves.

DIAGONAL CORNER CABINETS

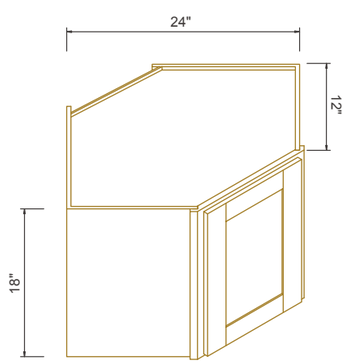

ITEM	DESCRIPTION	WIDTH	DEPTH	HEIGHT
WDC2418	Cabinet Dimension	24	12	18
	Door Dimension	15 13/32	3/4	17 5/8

Actual product specifications may vary.

ROC CABINETRY
Address: 505 Best Friend Court, Suite 580 & 560, Norcross, GA 30071
Tel:770-847-8222 E-mail:info@roccabinetry.com www.roccabinetry.com

PRODUCT SPECIFICATIONS - Wall Cabinets

WALL BLIND CORNER CABINETS

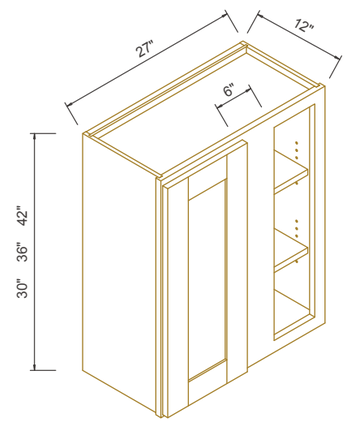

ITEM	DESCRIPTION	WIDTH	DEPTH	HEIGHT
WBC2730	Cabinet Dimension	27	12	30
	Door Dimension	11 3/4	3/4	29 5/8
WBC2736	Cabinet Dimension	27	12	36
	Door Dimension	11 3/4	3/4	35 5/8
WBC2742	Cabinet Dimension	27	12	42
	Door Dimension	11 3/4	3/4	41 5/8

Note: 30" H and 36" H cabinets with 2 Adj. Shelves; 42" H cabinets with 3 Adj Shelves.

WALL END OPEN SHELVES

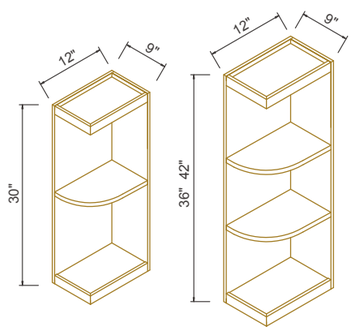

ITEM	DESCRIPTION	WIDTH	DEPTH	HEIGHT
WES0930	Cabinet Dimension	9	12	30
	Number of Shelves	1	1	1
WES0936	Cabinet Dimension	9	12	36
	Number of Shelves	2	2	2
WES0942	Cabinet Dimension	9	12	42
	Number of Shelves	2	2	2

Note: 1 Adj. Shelf for WES0930;
2 Adj. Shelves for WES0936-WES0942.

Actual product specifications may vary.

PRODUCT SPECIFICATIONS - Wall Cabinets

WINE RACK CABINETS WITH X DIVIDER CUBE INSERT

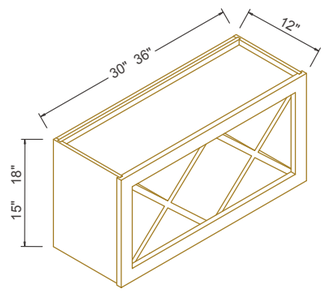

ITEM	DESCRIPTION	WIDTH	DEPTH	HEIGHT
WXR3015	Cabinet Dimension	30	12	15
WXR3018	Cabinet Dimension	30	12	18
WXR3615	Cabinet Dimension	36	12	15
WXR3618	Cabinet Dimension	36	12	18

WINE RACK CABINETS WITH LATTICE PANELS

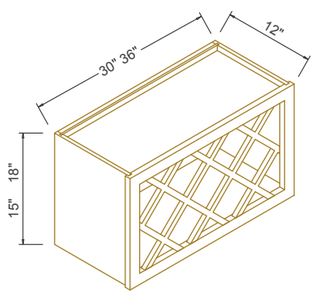

ITEM	DESCRIPTION	WIDTH	DEPTH	HEIGHT
WR3015	Cabinet Dimension	30	12	15
WR3018	Cabinet Dimension	30	12	18
WR3615	Cabinet Dimension	36	12	15
WR3618	Cabinet Dimension	36	12	18

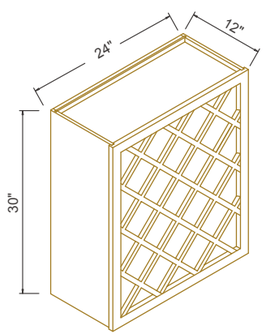

ITEM	DESCRIPTION	WIDTH	DEPTH	HEIGHT
WR2430	Cabinet Dimension	24	12	30

Actual product specifications may vary.

ROC CABINETRY
Address: 505 Best Friend Court, Suite 580 & 560, Norcross, GA 30071
Tel:770-847-8222 E-mail:info@roccabinetry.com www.roccabinetry.com

PRODUCT SPECIFICATIONS - Wall Cabinets

WALL EASY REACH CABINETS

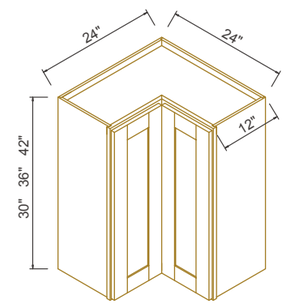

ITEM	DESCRIPTION	WIDTH	DEPTH	HEIGHT
WER2430	Cabinet Dimension	24	12	30
	Door Dimension	10 3/16	3/4	29 5/8
WER2436	Cabinet Dimension	24	12	36
	Door Dimension	10 3/16	3/4	35 5/8
WER2442	Cabinet Dimension	24	12	42
	Door Dimension	10 3/16	3/4	41 5/8

Note: 30" H and 36" H cabinets with 2 Adj. Shelves; 42" H cabinets with 3 Adj Shelves.

WALL MICROWAVE OPEN SHELVES

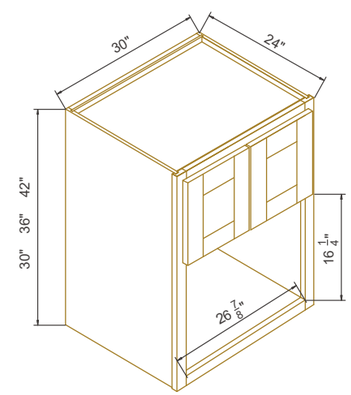

ITEM	DESCRIPTION	WIDTH	DEPTH	HEIGHT
WM303024	Cabinet Dimension	30	24	30
	Door Dimension	14 3/4	3/4	11 5/8
	Open Shelf	26 7/8	24	16 1/4
WM303624	Cabinet Dimension	30	24	36
	Door Dimension	14 3/4	3/4	17 5/8
	Open Shelf	26 7/8	24	16 1/4
WM304224	Cabinet Dimension	30	24	42
	Door Dimension	14 3/4	3/4	23 5/8
	Open Shelf	26 7/8	24	16 1/4

Actual product specifications may vary.

PRODUCT SPECIFICATIONS - Wall Cabinets

WALL END ANGLE CABINETS

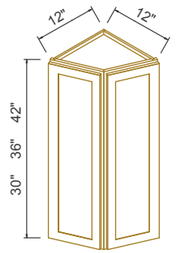

ITEM	DESCRIPTION	WIDTH	DEPTH	HEIGHT
WEA1230	Cabinet Dimension	12	12	30
	Door Dimension	9 1/4	3/4	29 5/8
WEA1236	Cabinet Dimension	12	12	36
	Door Dimension	9 1/4	3/4	35 5/8
WEA1242	Cabinet Dimension	12	12	42
	Door Dimension	9 1/4	3/4	41 5/8

Note: 30" H and 36" H cabinets with 2 Adj. Shelves; 42" H cabinets with 3 Adj Shelves.

WALL END CORNER CABINETS

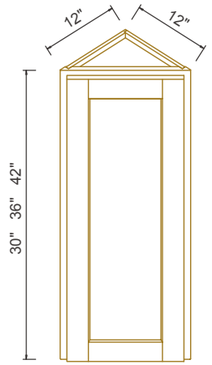

ITEM	DESCRIPTION	WIDTH	DEPTH	HEIGHT
WEC1230	Cabinet Dimension	12	12	30
	Door Dimension	15 27/32	3/4	29 5/8
	Number of Shelves	2	2	2
WEC1236	Cabinet Dimension	12	12	36
	Door Dimension	15 27/32	3/4	35 5/8
	Number of Shelves	2	2	2
WEC1242	Cabinet Dimension	12	12	42
	Door Dimension	15 27/32	3/4	41 5/8
	Number of Shelves	3	3	3

Note: 30" H and 36" H cabinets with 2 Adj. Shelves; 42" H cabinets with 3 Adj Shelves.

WALL DRAWER CABINETS

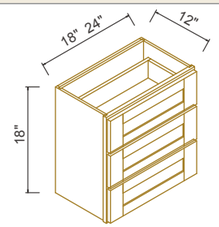

ITEM	DESCRIPTION	WIDTH	DEPTH	HEIGHT
3DW18	Cabinet Dimension	18	12	18
	Top Drawer Front	17 5/8	3/4	5 3/4
	Bottom Drawer Front	17 5/8	3/4	5 3/4
3DW24	Cabinet Dimension	24	12	18
	Top Drawer Front	23 5/8	3/4	5 3/4
	Bottom Drawer Front	23 5/8	3/4	5 3/4

Actual product specifications may vary.

ROC CABINETRY
Address: 505 Best Friend Court, Suite 580 & 560, Norcross, GA 30071
Tel:770-847-8222 E-mail:info@roccabinetry.com www.roccabinetry.com

PRODUCT SPECIFICATIONS - Glass Door Wall Cabinets

GLASS DOOR WALL CABINETS (Glass Insert Sold Separately)

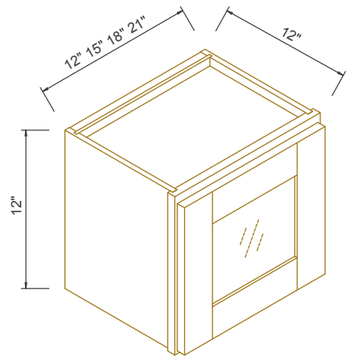

ITEM	DESCRIPTION	WIDTH	DEPTH	HEIGHT
W1212GD	Cabinet Dimension	12	12	12
	Door Dimension	11 3/4	3/4	11 5/8
W1512GD	Cabinet Dimension	15	12	12
	Door Dimension	14 3/4	3/4	11 5/8
W1812GD	Cabinet Dimension	18	12	12
	Door Dimension	17 3/4	3/4	11 5/8
W2112GD	Cabinet Dimension	21	12	12
	Door Dimension	20 3/4	3/4	11 5/8

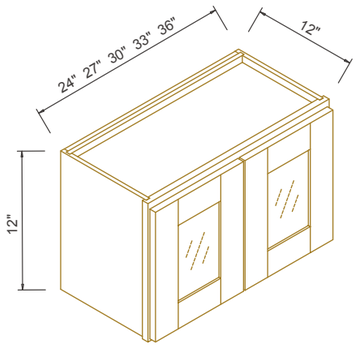

ITEM	DESCRIPTION	WIDTH	DEPTH	HEIGHT
W2412GD	Cabinet Dimension	12	12	12
	Door Dimension	11 3/4	3/4	11 5/8
W2712GD	Cabinet Dimension	15	12	12
	Door Dimension	13 7/32	3/4	11 5/8
W3012GD	Cabinet Dimension	18	12	12
	Door Dimension	14 3/4	3/4	11 5/8
W3312GD	Cabinet Dimension	21	12	12
	Door Dimension	16 7/32	3/4	11 5/8
W3612GD	Cabinet Dimension	36	12	12
	Door Dimension	17 3/4	3/4	11 5/8

Actual product specifications may vary.

PRODUCT SPECIFICATIONS - Wall Cabinets

GLASS DOOR WALL CABINETS (Glass Insert Sold Separately)

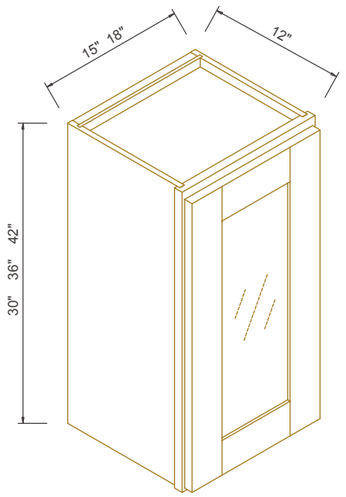

ITEM	DESCRIPTION	WIDTH	DEPTH	HEIGHT
W1530GD	Cabinet Dimension	15	12	30
	Door Dimension	14 3/4	3/4	29 5/8
W1536GD	Cabinet Dimension	15	12	36
	Door Dimension	14 3/4	3/4	35 5/8
W1542GD	Cabinet Dimension	15	12	42
	Door Dimension	14 3/4	3/4	41 5/8
W1830GD	Cabinet Dimension	18	12	30
	Door Dimension	17 3/4	3/4	29 5/8
W1836GD	Cabinet Dimension	18	12	36
	Door Dimension	17 3/4	3/4	35 5/8
W1842GD	Cabinet Dimension	18	12	42
	Door Dimension	17 3/4	3/4	41 5/8

Note: 30" H and 36" H cabinets with 2 Adj. Shelves; 42" H cabinets with 3 Adj Shelves.

WALL DIAGONAL CORNER CABINETS WITH GLASS DOOR (Glass Insert Sold Separately)

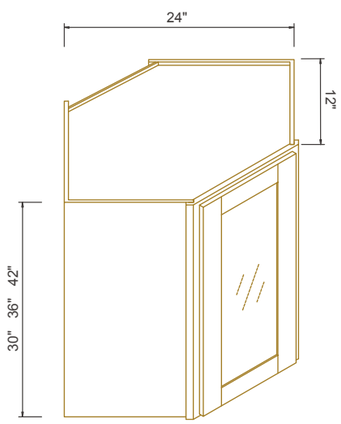

ITEM	DESCRIPTION	WIDTH	DEPTH	HEIGHT
WDC2430GD	Cabinet Dimension	24	12	30
	Door Dimension	15 13/32	3/4	29 5/8
WDC2436GD	Cabinet Dimension	24	12	36
	Door Dimension	15 13/32	3/4	35 5/8
WDC2442GD	Cabinet Dimension	24	12	42
	Door Dimension	15 13/32	3/4	41 5/8

Note: 30" H and 36" H cabinets with 2 Adj. Shelves; 42" H cabinets with 3 Adj Shelves.

Actual product specifications may vary.

ROC CABINETRY
Address: 505 Best Friend Court, Suite 580 & 560, Norcross, GA 30071
Tel:770-847-8222 E-mail:info@roccabinetry.com www.roccabinetry.com

PRODUCT SPECIFICATIONS - Glass Door Wall Cabinets

GLASS DOOR WALL CABINETS (Glass Insert Sold Separately)

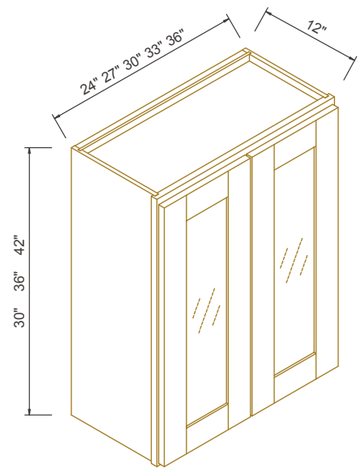

ITEM	DESCRIPTION	WIDTH	DEPTH	HEIGHT
W2430GD	Cabinet Dimension	24	12	30
	Door Dimension	11 3/4	3/4	29 5/8
W3030GD	Cabinet Dimension	30	12	30
	Door Dimension	14 3/4	3/4	29 5/8
W3630GD	Cabinet Dimension	36	12	30
	Door Dimension	17 3/4	3/4	29 5/8
W2436GD	Cabinet Dimension	24	12	36
	Door Dimension	11 3/4	3/4	35 5/8
W3036GD	Cabinet Dimension	30	12	36
	Door Dimension	14 3/4	3/4	35 5/8
W3636GD	Cabinet Dimension	36	12	36
	Door Dimension	17 3/4	3/4	35 5/8
W2442GD	Cabinet Dimension	24	12	42
	Door Dimension	11 3/4	3/4	41 5/8
W3042GD	Cabinet Dimension	30	12	42
	Door Dimension	14 3/4	3/4	41 5/8
W3642GD	Cabinet Dimension	36	12	42
	Door Dimension	17 3/4	3/4	41 5/8

Note: 30" H and 36" H cabinets with 2 Adj. Shelves; 42" H cabinets with 3 Adj Shelves.

Actual product specifications may vary.

PRODUCT SPECIFICATIONS - Vanities

VANITY SINGLE SINK BASES

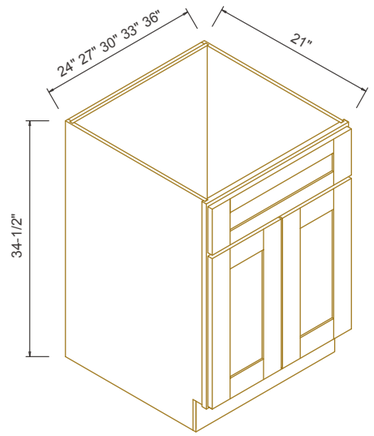

ITEM	DESCRIPTION	WIDTH	DEPTH	HEIGHT
VA24	Cabinet Dimension	24	21	34 1/2
	Door Dimension	11 21/32	3/4	22 1/4
	Drawer Face Front	23 5/8	3/4	7 1/4
VA27	Cabinet Dimension	27	21	34 1/2
	Door Dimension	13 1/8	3/4	22 1/4
	Drawer Face Front	26 5/8	3/4	7 1/4
VA30	Cabinet Dimension	30	21	34 1/2
	Door Dimension	14 21/32	3/4	22 1/4
	Drawer Face Front	29 5/8	3/4	7 1/4
VA33	Cabinet Dimension	33	21	34 1/2
	Door Dimension	16 1/8	3/4	22 1/4
	Drawer Face Front	32 5/8	3/4	7 1/4
VA36	Cabinet Dimension	36	21	34 1/2
	Door Dimension	17 21/32	3/4	22 1/4
	Drawer Front	35 5/8	3/4	7 1/4

VANITY COMBINATION SINGLE SINK BASES

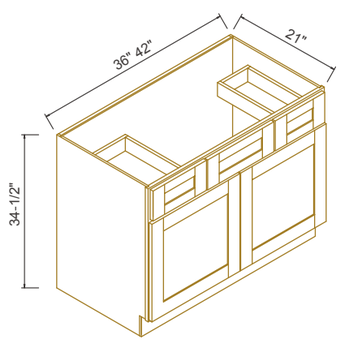

ITEM	DESCRIPTION	WIDTH	DEPTH	HEIGHT
VSD36	Cabinet Dimension	36	21	34 1/2
	Door Dimension	17 21/32	3/4	22 1/4
	Drawer Face Front	14 1/2	3/4	7 1/4
	Top Drawer Front	10 5/16	3/4	7 1/4
VSD42	Cabinet Dimension	42	21	34 1/2
	Door Dimension	20 21/32	3/4	22 1/4
	Drawer Face Front	17 15/16	3/4	7 1/4
	Top Drawer Front	11 19/32	3/4	7 1/4

Actual product specifications may vary.

ROC CABINETRY
Address: 505 Best Friend Court, Suite 580 & 560, Norcross, GA 30071
Tel:770-847-8222 E-mail:info@roccabinetry.com www.roccabinetry.com

PRODUCT SPECIFICATIONS - Vanities

VANITY SINGLE SINK BASES WITH 3 DRAWERS ON THE LEFT

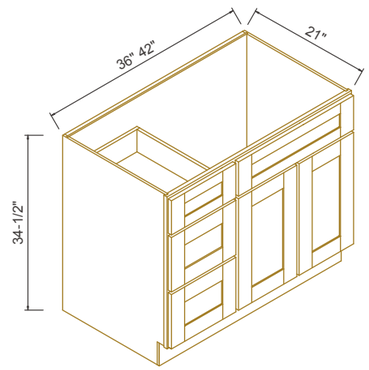

ITEM	DESCRIPTION	WIDTH	DEPTH	HEIGHT
VA36DL	Cabinet Dimension	36	21	34 1/2
	Door Dimension	11 5/8	3/4	22 1/4
	Drawer Face Front	23 3/8	3/4	7 1/4
	Top Drawer Front	11 19/32	3/4	7 1/4
	Bottom Drawer Front	11 19/32	3/4	11 1/32
VA42DL	Cabinet Dimension	42	21	34 1/2
	Door Dimension	14 5/8	3/4	22 1/4
	Drawer Face Front	29 3/8	3/4	7 1/4
	Top Drawer Front	11 19/32	3/4	7 1/4
	Bottom Drawer Front	11 19/32	3/4	11 1/32

VANITY SINGLE SINK BASES WITH 3 DRAWERS ON THE RIGHT

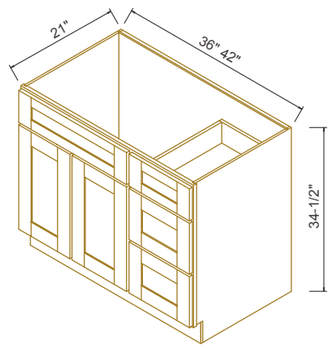

ITEM	DESCRIPTION	WIDTH	DEPTH	HEIGHT
VA36DR	Cabinet Dimension	36	21	34 1/2
	Door Dimension	11 5/8	3/4	22 1/4
	Drawer Face Front	23 3/8	3/4	7 1/4
	Top Drawer Front	11 19/32	3/4	7 1/4
	Bottom Drawer Front	11 19/32	3/4	11 1/32
VA42DR	Cabinet Dimension	42	21	34 1/2
	Door Dimension	14 5/8	3/4	22 1/4
	Drawer Face Front	29 3/8	3/4	7 1/4
	Top Drawer Front	11 19/32	3/4	7 1/4
	Bottom Drawer Front	11 19/32	3/4	11 1/32

Actual product specifications may vary.

PRODUCT SPECIFICATIONS - Vanities

VANITY SINGLE SINK BASES WITH 2 DRAWERS ON THE LEFT

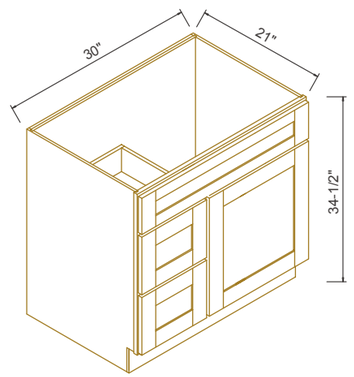

ITEM	DESCRIPTION	WIDTH	DEPTH	HEIGHT
VA30-2DL	Cabinet Dimension	30	21	34 1/2
	Door Dimension	17 5/8	3/4	22 1/4
	Drawer Face Front	29 3/8	3/4	7 1/4
	Bottom Drawer Front	11 19/32	3/4	11 1/32

VANITY SINGLE SINK BASES WITH 2 DRAWERS ON THE RIGHT

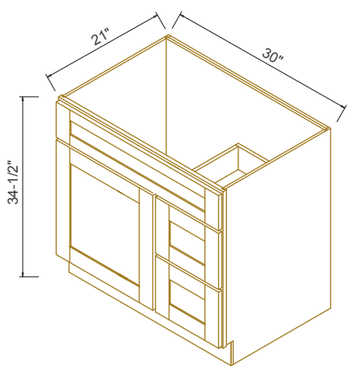

ITEM	DESCRIPTION	WIDTH	DEPTH	HEIGHT
VA30-2DR	Cabinet Dimension	30	21	34 1/2
	Door Dimension	17 5/8	3/4	22 1/4
	Drawer Face Front	29 3/8	3/4	7 1/4
	Bottom Drawer Front	11 19/32	3/4	11 1/32

Actual product specifications may vary.

ROC CABINETRY
Address: 505 Best Friend Court, Suite 580 & 560, Norcross, GA 30071
Tel:770-847-8222 E-mail:info@roccabinetry.com www.roccabinetry.com

PRODUCT SPECIFICATIONS - Vanities

VANITY SINGLE SINK BASES WITH 2 DRAWERS ON THE LEFT

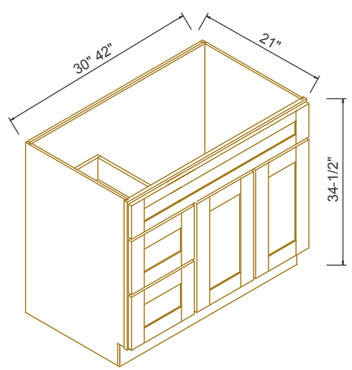

ITEM	DESCRIPTION	WIDTH	DEPTH	HEIGHT
VA36-2DL	Cabinet Dimension	36	21	34 1/2
	Door Dimension	11 5/8	3/4	22 1/4
	Drawer Front	11 19/32	3/4	11 1/32
	False Drawer Front	35 13/32	3/4	7 1/4
VA42-2DL	Cabinet Dimension	42	21	34 1/2
	Door Dimension	14 5/8	3/4	22 1/4
	Drawer Front	11 19/32	3/4	11 1/32
	False Drawer Front	41 13/32	3/4	7 1/4

VANITY SINGLE SINK BASES WITH 2 DRAWERS ON THE RIGHT

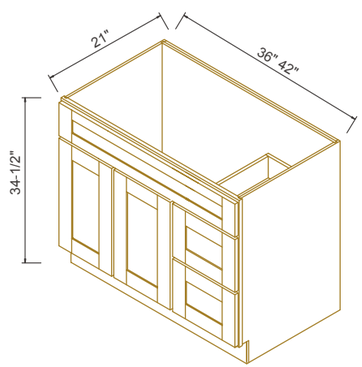

ITEM	DESCRIPTION	WIDTH	DEPTH	HEIGHT
VA36-2DR	Cabinet Dimension	36	21	34 1/2
	Door Dimension	11 5/8	3/4	22 1/4
	Drawer Front	11 19/32	3/4	11 1/32
	False Drawer Front	35 13/32	3/4	7 1/4
VA42-2DR	Cabinet Dimension	42	21	34 1/2
	Door Dimension	14 5/8	3/4	22 1/4
	Drawer Front	11 19/32	3/4	11 1/32
	False Drawer Front	41 13/32	3/4	7 1/4

Actual product specifications may vary.

PRODUCT SPECIFICATIONS - Vanities

VANITY THREE DRAWERS BASES

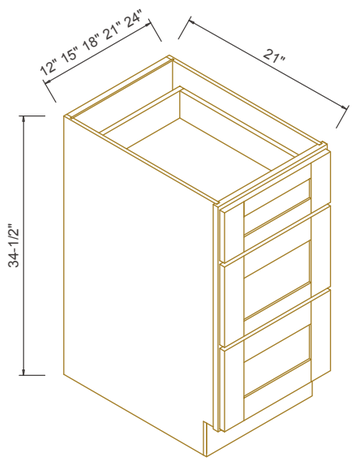

ITEM	DESCRIPTION	WIDTH	DEPTH	HEIGHT
VDB12	Cabinet Dimension	12	21	34 1/2
	Top Drawer Front	11 15/32	3/4	7 1/4
	Bottom Drawer Front	11 15/32	3/4	11 1/32
VDB15	Cabinet Dimension	15	21	34 1/2
	Top Drawer Front	14 15/32	3/4	7 1/4
	Bottom Drawer Front	14 15/32	3/4	11 1/32
VDB18	Cabinet Dimension	18	21	34 1/2
	Top Drawer Front	17 15/32	3/4	7 1/4
	Bottom Drawer Front	17 15/32	3/4	11 1/32
VDB21	Cabinet Dimension	21	21	34 1/2
	Top Drawer Front	20 15/32	3/4	7 1/4
	Bottom Drawer Front	20 15/32	3/4	11 1/32
VDB24	Cabinet Dimension	24	21	34 1/2
	Top Drawer Front	23 15/32	3/4	7 1/4
	Bottom Drawer Front	23 15/32	3/4	11 1/32

VANITY COMBINATION SINGLE SINK BASE WITH 6 DRAWERS

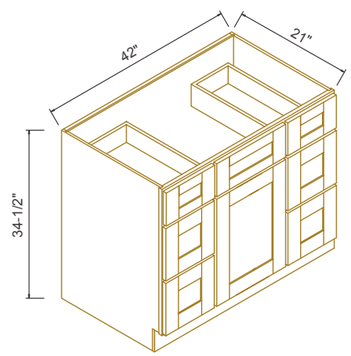

ITEM	DESCRIPTION	WIDTH	DEPTH	HEIGHT
VDDB42	Cabinet Dimension	42	21	34 1/2
	Door Dimension	17 3/8	3/4	22 1/4
	Drawer Face Front	17 3/8	3/4	7 1/4
	Top Drawer Front	11 19/32	3/4	7 1/4
	Bottom Drawer Front	11 19/32	3/4	11 1/32

Actual product specifications may vary.

ROC CABINETRY
Address: 505 Best Friend Court, Suite 580 & 560, Norcross, GA 30071
Tel:770-847-8222 E-mail:info@roccabinetry.com www.roccabinetry.com

PRODUCT SPECIFICATIONS - Vanities

VANITY SINGLE SINK BASES WITH DRAWERS ON BOTH SIDES

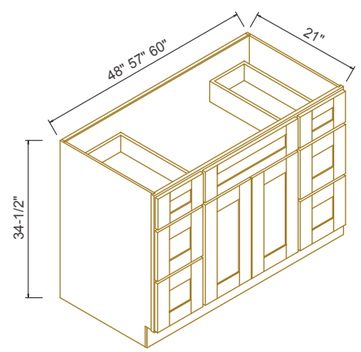

ITEM	DESCRIPTION	WIDTH	DEPTH	HEIGHT
VA48DD	Cabinet Dimension	48	21	34 1/2
	Door Dimension	11 5/8	3/4	22 1/4
	Drawer Face Front	23 3/8	3/4	7 1/4
	Top Drawer Front	11 19/32	3/4	7 1/4
	Bottom Drawer Front	11 19/32	3/4	11 1/32
VA57DD	Cabinet Dimension	57	21	34 1/2
	Door Dimension	16 1/8	3/4	22 1/4
	Drawer Face Front	32 3/8	3/4	7 1/4
	Top Drawer Front	11 19/32	3/4	7 1/4
	Bottom Drawer Front	11 19/32	3/4	11 1/32
VA60DD	Cabinet Dimension	60	21	34 1/2
	Door Dimension	17 5/8	3/4	22 1/4
	Drawer Face Front	35 3/8	3/4	7 1/4
	Top Drawer Front	11 19/32	3/4	7 1/4
	Bottom Drawer Front	11 19/32	3/4	11 1/32

VANITY DOUBLE SINK BASES WITH CENTRAL DRAWERS

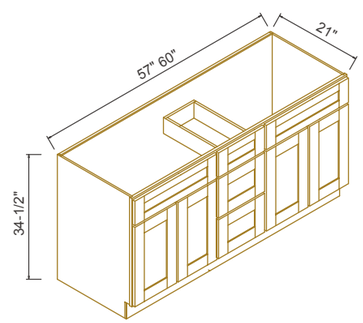

ITEM	DESCRIPTION	WIDTH	DEPTH	HEIGHT
VA57D	Cabinet Dimension	57	21	34 1/2
	Door Dimension	10 7/8	3/4	22 1/4
	Drawer Face Front	21 3/8	3/4	7 1/4
	Top Drawer Front	11 19/32	3/4	7 1/4
	Bottom Drawer Front	11 19/32	3/4	11 1/32
VA60D	Cabinet Dimension	60	21	34 1/2
	Door Dimension	11 5/8	3/4	22 1/4
	Drawer Face Front	23 3/8	3/4	7 1/4
	Top Drawer Front	11 19/32	3/4	7 1/4
	Bottom Drawer Front	11 19/32	3/4	11 1/32

Actual product specifications may vary.

PRODUCT SPECIFICATIONS - MOLDING & DÉCOR

KNEE DRAWERS

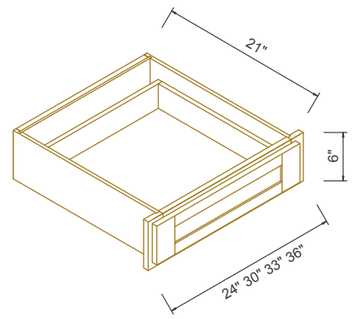

ITEM	DESCRIPTION	WIDTH	DEPTH	HEIGHT
DD24A	Cabinet Dimension	24	21	6
	Drawer Front	23 5/8	3/4	5 1/2
DD30A	Cabinet Dimension	30	21	6
	Drawer Front	29 5/8	3/4	5 1/2
DD33A	Cabinet Dimension	33	21	6
	Drawer Front	32 5/8	3/4	5 1/2
DD36A	Cabinet Dimension	36	21	6
	Drawer Front	35 5/8	3/4	5 1/2

ROLL OUT DRAWERS

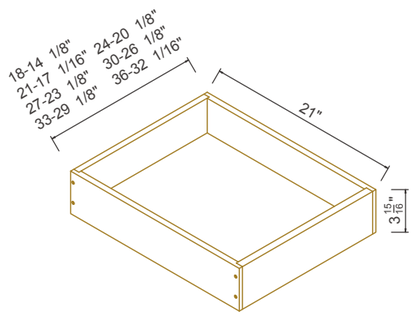

ITEM	DESCRIPTION	WIDTH	DEPTH	HEIGHT
RD18S	Drawer Dimension	14 1/8	21	3 15/16
RD21S	Drawer Dimension	17 1/16	21	3 15/16
RD24S	Drawer Dimension	20 1/8	21	3 15/16
RD27S	Drawer Dimension	23 1/8	21	3 15/16
RD30S	Drawer Dimension	26 1/8	21	3 15/16
RD33S	Drawer Dimension	29 1/8	21	3 15/16
RD36S	Drawer Dimension	32 1/16	21	3 15/16

Actual product specifications may vary.

ROC CABINETRY
Address: 505 Best Friend Court, Suite 580 & 560, Norcross, GA 30071
Tel:770-847-8222 E-mail:info@roccabinetry.com www.roccabinetry.com

PRODUCT SPECIFICATIONS - MOLDING & DÉCOR

BASE DECORATIVE PANELS

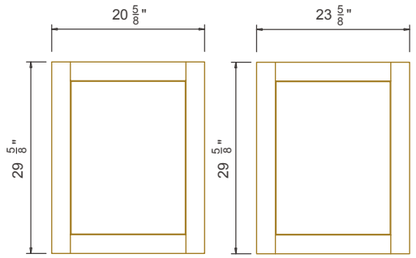

ITEM	DESCRIPTION	WIDTH	DEPTH	HEIGHT
BDD21A	Door Dimensions	20 5/8	3/4	29 5/8
BDD24A	Door Dimensions	23 5/8	3/4	29 5/8

TALL DECORATIVE PANELS

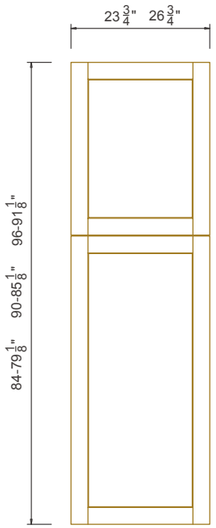

ITEM	DESCRIPTION	WIDTH	DEPTH	HEIGHT
TDEP2484	Door Dimensions	23 3/4	3/4	79 1/8
TDEP2490	Door Dimensions	23 3/4	3/4	85 1/8
TDEP2496	Door Dimensions	23 3/4	3/4	91 1/8
TDEP2784	Door Dimensions	26 3/4	3/4	79 1/8
TDEP2790	Door Dimensions	26 3/4	3/4	85 1/8
TDEP2796	Door Dimensions	26 3/4	3/4	91 1/8

Actual product specifications may vary.

PRODUCT SPECIFICATIONS - MOLDING & DÉCOR

WALL DECORATIVE PANELS

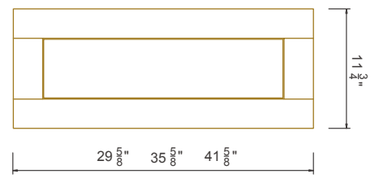

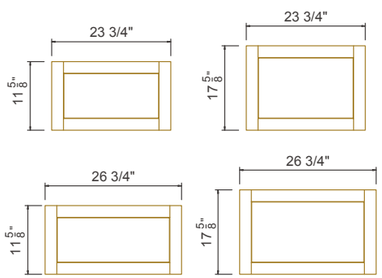

ITEM	DESCRIPTION	WIDTH	DEPTH	HEIGHT
WFD1230	Door Dimensions	11 3/4	3/4	29 5/8
WFD1236	Door Dimensions	11 3/4	3/4	35 5/8
WFD1242	Door Dimensions	11 3/4	3/4	41 5/8
WFD2412	Door Dimensions	23 3/4	3/4	11 5/8
WFD2418	Door Dimensions	23 3/4	3/4	17 5/8
WFD2712	Door Dimensions	26 3/4	3/4	11 5/8
WFD2718	Door Dimensions	26 3/4	3/4	17 5/8

BASE WINE RACK X DIVIDER INSERTS

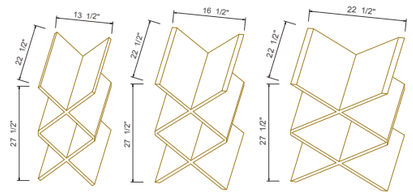

ITEM	DESCRIPTION	WIDTH	DEPTH	HEIGHT
BWRX15	Dimension	27 1/2	22 1/2	13 1/2
BWRX18	Dimension	27 1/2	22 1/2	16 1/2
BWRX24	Dimension	27 1/2	22 1/2	22 1/2

WALL STEAM GLASS HANGERS

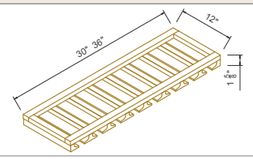

ITEM	DESCRIPTION	WIDTH	DEPTH	HEIGHT
GR30	Cabinet Dimension	30	12	1 5/8
GR36	Cabinet Dimension	36	12	1 5/8

Actual product specifications may vary.

ROC CABINETRY
Address: 505 Best Friend Court, Suite 580 & 560, Norcross, GA 30071
Tel:770-847-8222 E-mail:info@roccabinetry.com www.roccabinetry.com

PRODUCT SPECIFICATIONS - MOLDING & DÉCOR

BASE FINISH PANELS-THICK

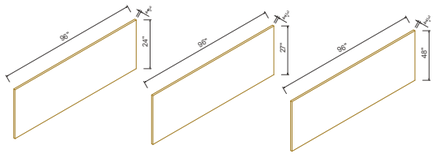

ITEM	DESCRIPTION	WIDTH	DEPTH	HEIGHT
BP2496 3/4	Panel Dimensions	24	3/4	96
BP2796 3/4	Panel Dimensions	27	3/4	96
BP4896 3/4	Panel Dimensions	48	3/4	96

BASE FINISH SKIN PANELS

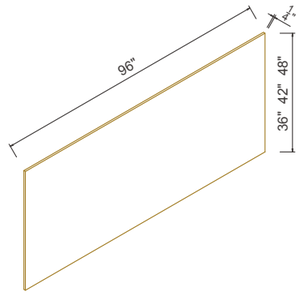

ITEM	DESCRIPTION	WIDTH	DEPTH	HEIGHT
BP3696	Panel Dimensions	36	1/4	96
BP4296	Panel Dimensions	42	1/4	96
BP4896	Panel Dimensions	48	1/4	96

BEADED PLYWOOD FINISH PANEL

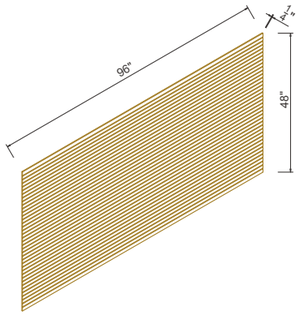

ITEM	DESCRIPTION	WIDTH	DEPTH	HEIGHT
BBFPV4896	Panel Dimensions	48	1/4	96

Actual product specifications may vary.

PRODUCT SPECIFICATIONS - MOLDING & DÉCOR

DISHWASHER END PANEL

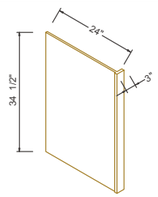

ITEM	DESCRIPTION	WIDTH	DEPTH	HEIGHT
DWR	Panel Dimensions	24	1/2	34 1/2
	Filler Dimensions	3	1/2	34 1/2

REFRIGERATOR END PANELS

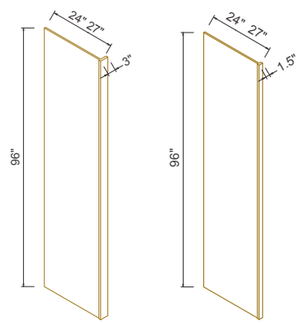

ITEM	DESCRIPTION	WIDTH	DEPTH	HEIGHT
RRP96	Panel Dimensions	24	1/2	96
	Filler Dimensions	3	1/2	96
RRP96A	Panel Dimensions	24	1/2	96
	Filler Dimensions	1 1/2	1/2	96
RRP9627	Panel Dimensions	27	1/2	96
	Filler Dimensions	3	1/2	96
RRP9627A	Panel Dimensions	27	1/2	96
	Filler Dimensions	1 1/2	1/2	96

TOE-KICK

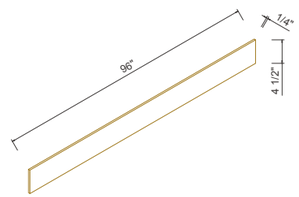

ITEM	DESCRIPTION	WIDTH	DEPTH	HEIGHT
TK8	Filler Dimensions	4 1/2	1/4	96

Actual product specifications may vary.

ROC CABINETRY
Address: 505 Best Friend Court, Suite 580 & 560, Norcross, GA 30071
Tel:770-847-8222 E-mail:info@roccabinetry.com www.roccabinetry.com

PRODUCT SPECIFICATIONS - MOLDING & DÉCOR

BASE SKIN PANEL

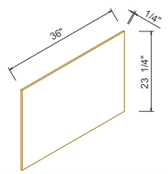

ITEM	DESCRIPTION	WIDTH	DEPTH	HEIGHT
BSP2436	Panel Dimensions	23 1/4	1/4	36

TRAY DIVIDER INSERT (NATURAL WOOD COLOR)

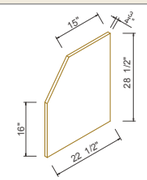

ITEM	DESCRIPTION	WIDTH	DEPTH	HEIGHT
TD2430	Panel Dimensions	22-1/2	3/4	28-1/2

WALL SKIN PANEL

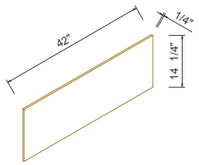

ITEM	DESCRIPTION	WIDTH	DEPTH	HEIGHT
WSP1542	Panel Dimensions	14-1/4	1/4	42

FLOATING SHELF

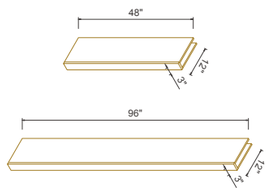

ITEM	DESCRIPTION	WIDTH	DEPTH	HEIGHT
BEFF48	Panel Dimensions	48	12	3
BEFF96	Panel Dimensions	96	12	3

Actual product specifications may vary.

PRODUCT SPECIFICATIONS - MOLDING & DÉCOR

WALL FILLERS

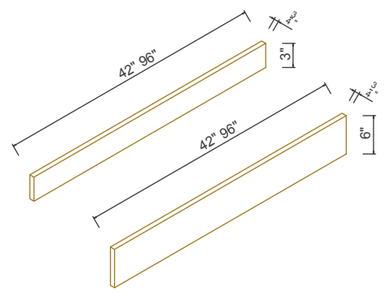

ITEM	DESCRIPTION	WIDTH	DEPTH	HEIGHT
WF342	Filler Dimensions	3	3/4	42
WF396	Filler Dimensions	3	3/4	96
WF642	Filler Dimensions	6	3/4	42
WF696	Filler Dimensions	6	3/4	96

CORBELS

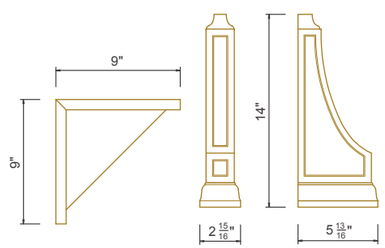

ITEM	DESCRIPTION	WIDTH	DEPTH	HEIGHT
SBS 9*9*3	Countertop Support	9	3	9
SBS 13*9 B	Countertop Support	5 13/16	2 15/16	14

Actual product specifications may vary.

ROC CABINETRY
Address: 505 Best Friend Court, Suite 580 & 560, Norcross, GA 30071
Tel:770-847-8222 E-mail:info@roccabinetry.com www.roccabinetry.com

PRODUCT SPECIFICATIONS - MOLDING & DÉCOR

DECORATIVE LEGS

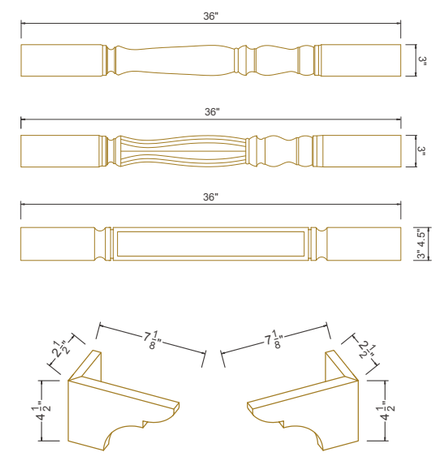

ITEM	DESCRIPTION	WIDTH	DEPTH	HEIGHT
SP3*36	Decorative Legs	3	3	36
SP3*36A	With Fluted Design on	3	3	36
SP3*36B SP4.5*36B	Decorative Legs	3	3	36
	Decorative Legs	4.5	4.5	36
VDL	Vanity Decorative Legs	7 1/8	2 1/2	4 1/2
	Note: only SW/SGF/ED/EW/EVG have VDL			

VALANCE BRIDGES

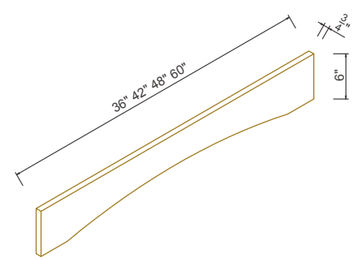

ITEM	DESCRIPTION	WIDTH	DEPTH	HEIGHT
VAS36	Dimension	36	3/4	6
VAS42	Dimension	42	3/4	6
VAS48	Dimension	48	3/4	6
VAS60	Dimension	60	3/4	6

Actual product specifications may vary.

PRODUCT SPECIFICATIONS - MOLDING & DÉCOR

COVE MOLDINGS

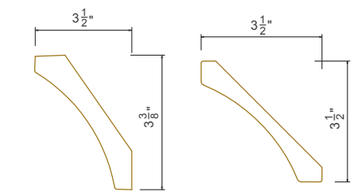

ITEM	DESCRIPTION	WIDE	DEPTH	LONG
COV8	Dimensions	3 1/2	3 1/2	96
COV8-3	Dimensions	3 3/8	2 1/2	96

CROWN MOLDINGS

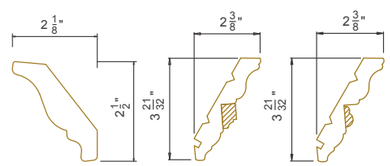

ITEM	DESCRIPTION	WIDE	DEPTH	LONG
CM3	Dimensions	2 1/2	2 1/8	96
CCM8+DE8	Dimensions	2 3/8	3 21/32	96
CCM8+RPM8	Dimensions	2 3/8	3 21/32	96

SCRIBE MOLDING

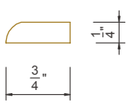

ITEM	DESCRIPTION	WIDE	DEPTH	LONG
SM8	Dimensions	3/4	1/4	96

BATTEN MOLDING

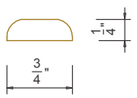

ITEM	DESCRIPTION	WIDE	DEPTH	LONG
BAM8	Dimensions	3/4	1/4	96
	DOUBLE SIDE FINISH			

Actual product specifications may vary.

ROC CABINETRY
Address: 505 Best Friend Court, Suite 580 & 560, Norcross, GA 30071
Tel:770-847-8222 E-mail:info@roccabinetry.com www.roccabinetry.com

PRODUCT SPECIFICATIONS - MOLDING & DÉCOR

BASE FURNITURE MOLDING

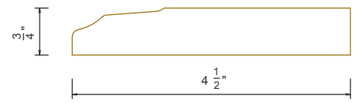

ITEM	DESCRIPTION	WIDE	DEPTH	LONG
BM8-4 1/2	Dimensions	4 1/2	3/4	96

BASE FUNITURE MOLDING

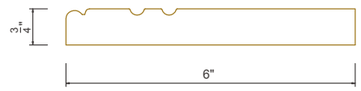

ITEM	DESCRIPTION	WIDE	DEPTH	LONG
FBM	Dimensions	6	3/4	96

COUNTERTOP MOLDING

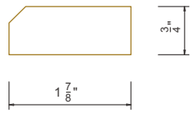

ITEM	DESCRIPTION	WIDE	DEPTH	LONG
CTM8	Dimensions	1 7/8	3/4	96

PANELTRIM MOLDING

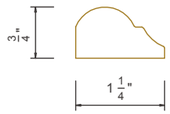

ITEM	DESCRIPTION	WIDE	DEPTH	LONG
K8-1 3/16	Dimensions	1 1/4	3/4	96

Actual product specifications may vary.

PRODUCT SPECIFICATIONS - MOLDING & DÉCOR

TRADITIONAL LIGHT RAIL MOLDING

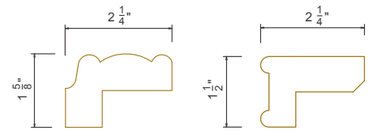

ITEM	DESCRIPTION	WIDE	DEPTH	LONG
TLR8	Dimensions	1 5/8	2 1/4	96
TLR8-A	Dimensions	1 1/2	2 1/4	96

SQUARE LIGHT RAIL MOLDING

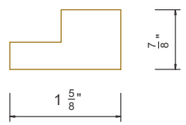

ITEM	DESCRIPTION	WIDE	DEPTH	LONG
SLRM8	Dimensions	1 5/8	7/8	96

ANGLED LIGHT RAIL MOLDING

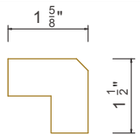

ITEM	DESCRIPTION	WIDE	DEPTH	LONG
ALRM8	Dimensions	1 5/8	1 1/2	96

QUARTER ROUND MOLDING

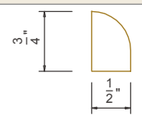

ITEM	DESCRIPTION	WIDE	DEPTH	LONG
QR8	Dimensions	3/4	1/2	96

OUTSIDE CORNER MOLDING

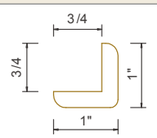

ITEM	DESCRIPTION	WIDE	DEPTH	LONG
OCM8A	Dimensions	1	1	96

Actual product specifications may vary.

ROC CABINETRY
Address: 505 Best Friend Court, Suite 580 & 560, Norcross, GA 30071
Tel:770-847-8222 E-mail:info@roccabinetry.com www.roccabinetry.com

PRODUCT SPECIFICATIONS - Accessories

WALL DECORATIVE PANELS/SAMPLE DOORS

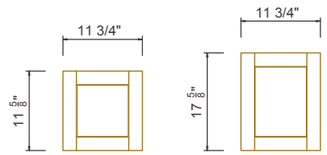

ITEM	DESCRIPTION
WFD1212 (SAMPLE DOOR)	SW, PG, SGF, SE, CW, CC, ED, EVG, EW, NB, CB
WFD1218 (SAMPLE DOOR)	SW, PG, SGF, ED, EVG, EW, NB, CB

TOUCH UP KITS / SPRAY CANS

ITEM	DESCRIPTION
TOUCH KIT	PUTTY STIK, MARKER PEN
SPRAY CAN	LACQUER 7.6 OZ CAN

PUTTY STICKS / PASTES

ITEM	DESCRIPTION
EDA PUTTY STICK	PUTTY STIK
CREAM PEN FILLER	SW, SGF, PG, ED, EVG, CC, CW

Actual product specifications may vary.

PRODUCT SPECIFICATIONS - Accessories

DRAWER GLIDES-FULL EXTENSION-SOFT CLOSE-UNDERMOUNT		
	ITEM	DESCRIPTION
	21”DRAWER GLIDE	21” SOFT CLOSE DRAWER GLIDE
	18”DRAWER GLIDE	18” SOFT CLOSE DRAWER GLIDE

HINGES		
	ITEM	DESCRIPTION
	EUROPEAN CONCEALED HINGE	METAL, CONCEALED, SOFT-CLOSE, 6-WAY ADJ.
	LAZY SUSAN HINGE	METAL, CONCEALED, NON-SOFT CLOSE, CONNECTING LS DOOR&FRAME

SHELF RESTS		
	ITEM	DESCRIPTION
	SHELF REST	METAL SHELF HOLDER WT. THREAD CLEAR GLASS SHELF SUCTION CUP

L-BRACKETS-90 DEGEE		
	ITEM	DESCRIPTION
	L BRACKET	METAL L BRACKET
	L BRACKET	METAL L BRACKET

Actual product specifications may vary.

ROC CABINETRY
Address: 505 Best Friend Court, Suite 580 & 560, Norcross, GA 30071
Tel:770-847-8222 E-mail:info@roccabinetry.com www.roccabinetry.com

One Year Limited Warranty

ROC Cabinetry warrants to the original purchaser that cabinetry, door hinges, and the drawer glides will be free from defects in material and workmanship under normal use and service for ONE year. This warranty is not transferable and only applicable to product used for residential purposes. Representatives of ROC Cabinetry do not have the authority to change or enlarge this warranty.
This warranty does not cover normal wear and tear, damage or defects caused by accidents, misuse, abuse, or lack of necessary maintenance; nor does it cover alteration,modification, improper install- ton, improper handling/storage, environmental conditions, nor any labor expenses. This warranty does not cover special orders, clearance orders and discontinued items.

ROC Cabinetry has the option to elect to repair or replace with a functionally equivalent product. Some replacement parts are subject to availability and may differ from original parts received. Return of defective product may be required for a replacement to be issued. Repair parts or replacement parts are at the expense of ROC Cabinetry, but customer shall bear all other expenses. These expenses may include, but are not limited to, cost of removal and re-installation of product, labor expenses, etc.
The variation in color and grain pattern in wood adds to its natural beauty and is not considered an imperfection. This warranty does not cover the environmental factors,including but not limited to artificial/ natural light, moisture, cleaners, smoke, etc., may cause the darkening or mellowing of a cabinet over time. This is a natural process and can be expected. Low moisture can cause joints to open.

Some of the cabinet lines feature a glazed finish which accentuates the door and drawer front profiles. This glaze is hand applied over a stain or paint and may, due to the nature of application, consist of random drips, runs, or may have variations in color and appearance from door to door and cabinet to cabinet. This is not considered a defect and is considered normal with hand applied finishes. It is the nature of wood to expand and contract to varying degrees depending on climate conditions. As a result, cabinet lines with painted surfaces may show fractures in the paint at joints. This is normal and is not considered a defect.

This warranty is valid only in the United States of America and is not transferable. To the extent permitted by law, this warranty excludes special, incidental, or consequential damages. Some states do not allow the exclusion or limitations of incidental or consequential damages or limitations on how long an implied warranty lasts, so the above limitations or exclusions may not apply to you. This warranty gives you specific legal rights; you may have other rights which vary from state to state.

To exercise this warranty, please contact the ROC Cabinetry supplier from whom you purchased the product. Report, in writing, along with pictures of defects. Please include proof of purchase documentation. If the supplier is not available, please write to: Warranty Department, ROC Cabinetry, 505 Best Friend Court Suite 580&560, Norcross, GA 30071 or Call:770-847-8222 Email: info@ roccabinetry.com